Electrolux

EM Series
4 Drawer Refrigerated-Freezer Base 72"

ITEM # _____

MODEL # _____

PROJECT NAME # _____

SIS # _____

AIA# _____

EM Series

4 Drawer Refrigerated-Freezer Base 72 "

727092 (COMP72)	4 DRAWER REFRIGERATED-FREEZER BASE 72" (1826 mm)

Short Form Specification

Item No. _____

Unit to be Electrolux Four (4) Drawer Refrigerated/Freezer Base with built-in compressor unit able to manage two separate temperatures. Unit able to oprate both as refrigerator or as freezer, with temperature range from -7.6°F to +46.4°F (-22°C to +8°C). Two (2) digital thermostats and displays are protected by the Stainless Steel front panel. Stainless Steel front panel with incorporated Stainless Steel wire netting is easy to remove for access to the thermostat and to allow for easy cleaning. May be installed below any top unit. Perforated top surface provides the necessary ventilation to allow for a flush connection between base and Electrolux top units, eliminating the need for the top unit legs. The two (2) large drawers on the left side of the compressor can each accommodate two (2) 12" x 20" x 6" deep pans with use of included, removable division bar or two (2) 325 mm x 530 mm (1/1 GN) pans, while the two (2) small drawers on the right side of the compressor can each accommodate one (1) 12" x 20" x 6" deep pan or one (1) 325 mm x 530 mm (1/1 GN) pan. Drawer guides with safety stop can support up to 264 lbs. (120 kg) and are removable for cleaning. Magnetic snap-in drawer gaskets are removable for cleaning. Perforated bottom plate in each drawer guarantees correct air-flow, allows for small pans to stand upright and is removable for cleaning. Large drawer perforated bottom plates can each support up to 88 lbs. (40 kg), while the small drawer perforated bottom plates can each support up to 55 lbs. (25 kg). Forced air circulation for rapid cooling and an even temperature distribution. Access to all components from the front and bottom. CFC free (ecological refrigerant type: R404a, - gas in foam: cyclopenthane). Suitable for use in ambient temperatures of up to 104 °F (40 °C). Rounded corners inside well for safe and easy cleaning. Constructed entirely in AISI 304 Stainless Steel with Scotch Brite finish. Right-angled side edges to allow flush fitting joints between units, minimizing gaps and possible dirt traps. Heavy duty Stainless Steel tubular drawer handles. Supplied with 6" (150 mm) height adjustable, removable legs. Unit may be installed on castors.

Intertek Intertek

Approval: _____

Main Features

- Four (4) Drawer Refrigerated/Freezer Base with built-in compressor unit able to manage two separate temperatures.
- Unit able to operate both as refrigerator or as freezer, with temperature range from -7.6°F to +46.4°F (-22°C to +8°C).
- Two (2) digital thermostats and displays are protected by the Stainless Steel front panel.
- Stainless Steel front panel with incorporated Stainless Steel wire netting is easy to remove for access to the thermostat and to allow for easy cleaning.
- May be installed below any top unit.
- Perforated top surface provides the necessary ventilation to allow for a flush connection between base and Electrolux top units, eliminating the need for the top unit legs.
- The two (2) large drawers on the left side of the compressor can each accommodate two (2) 12" x 20" x 6" deep pans with use of included, removable division bar or two (2) 325 mm x 530 mm (1/1 GN) pans, while the two (2) small drawers on the right side of the compressor can each accommodate one (1) 12" x 20" x 6" deep pan or one (1) 325 mm x 530 mm (1/1 GN) pan.
- Drawer guides with safety stop can support up to 264 lbs. (120 kg) and are removable for cleaning.
- Magnetic snap-in drawer gaskets are removable for cleaning.
- Perforated bottom plate in each drawer guarantees correct air-flow, allows for small pans to stand upright and is removable for cleaning.
- Large drawer perforated bottom plates can each support up to 88 lbs. (40 kg), while the small drawer perforated bottom plates can each support up to 55 lbs. (25 kg).
- Forced air circulation for rapid cooling and an even temperature distribution.
- Access to all components from the front and bottom.
- CFC free (ecological refrigerant type: R404a, - gas in foam: cyclopenthane).
- Suitable for use in ambient temperatures of up to 104 °F (40 °C).
- Rounded corners inside well for safe and easy cleaning.
- Constructed entirely in AISI 304 Stainless Steel with Scotch Brite finish.
- Right-angled side edges to allow flush fitting joints between units, minimizing gaps and possible dirt traps.
- Heavy duty Stainless Steel tubular drawer handles.
- Supplied with 6" (150 mm) height adjustable, removable legs.
- Unit may be installed on castors.

Optional Accessories

- 6 swivelling castors kit for refrigerator/freezer bases - 3 with brakes — PNC 880125 ❑

Electrolux Professional Inc.
www.electroluxusa.com/professional
www.electrolux.com/foodservice
foodservice@electrolux.com

Electrolux
EM Series
4 Drawer Refrigerated-Freezer Base 72"

Electrolux

EM Series
4 Drawer Refrigerated-Freezer Base
72"

Front

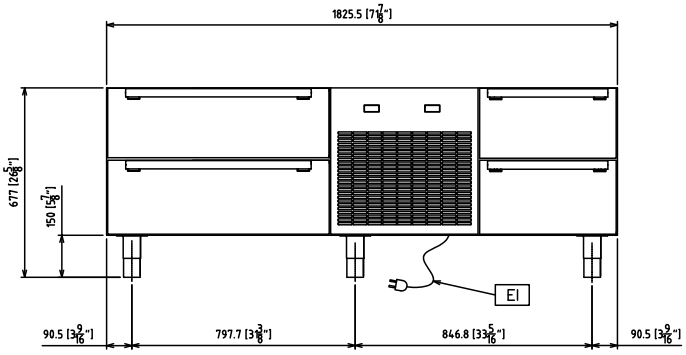

Top

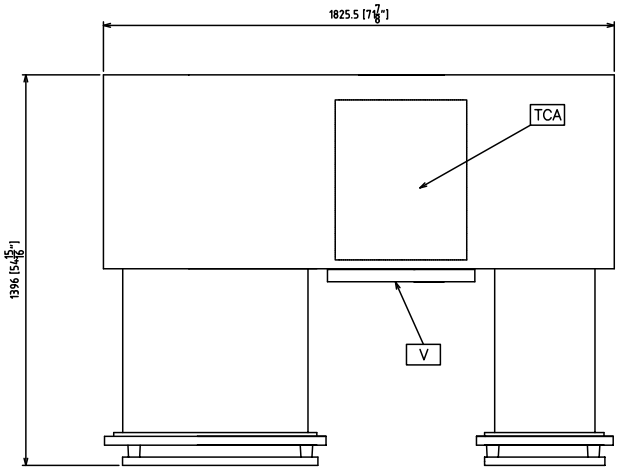

EI = Electrical connection
EQ = Equipotential screw

Side

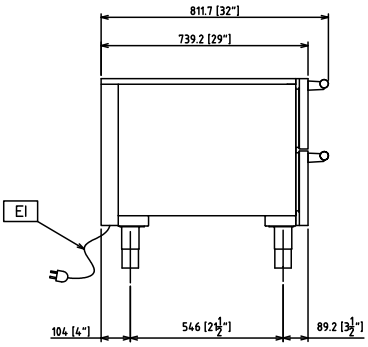

Electric

Supply voltage:	
727092(COMP72)	120 V/1N ph/60 Hz
Amps:	19
Total Watts:	1.83 kW

Key Information

External dimensions, Width	71 7/8" (1826 mm)
External dimensions, Depth	32 1/64" (813 mm)
External dimensions, Height	26 3/4" (680 mm)
Net weight:	370 lbs (168 kg)
Shipping width:	33 7/16" (850 mm)
Shipping depth:	76 3/4" (1950 kg)
Shipping height:	30 11/16" (780 mm)
Shipping weight:	392 lbs (178 kg)
Shipping volume:	45.65 ft³ (1.29 m³)
Refrigerant weight:	0.375 lbs (170 kg)

Refrigeration Data

Compressor power:	1/2 hp, self-contained
Refrigerant type:	R404a
Refrigeration power:	1958 W

The company reserves the right to make modifications to the products without prior notice. All information correct at time of printing.

2011.10.14