Electrolux

Warewashing Undercounter Dishwasher WT30 Energy Star

ITEM # _____

MODEL # _____

PROJECT NAME # _____

SIS # _____

AIA # _____

Warewashing
Undercounter Dishwasher
WT30 Energy Star

502315 (WT30H208DU) Undercounter Dishwasher - 208 V
502316 (WT30H240DU) Undercounter Dishwasher - 240 V

Short Form Specification

Item No. _____

Unit to be WT30 Undercounter hot water sanitizing dishmachine or glasswasher with Energy Star approvals. Electrical characteristics to be ___ 208 or ___ 240 volts single or three phase operation with three automatic cycles of 120/ 180 / 240 seconds using 0.89 gallon of fresh 180 °F final rinse water per rack. Rinse temperature and pressure guaranteed by built-in 70 °F rise hot water booster heater and built in rinse booster pump. Washing performance guaranteed by a 1 hp, soft start wash pump, upper and lower revolving washing spray arms. Unit to feature "Wash Safe Control" led light. "Green" light will indicate that all items washed have been properly sanitized. 304 stainless steel construction to include frame, wash tank, insulated booster tank and side panels. The unit shall include drain pump, detergent and rinse aid dispenser pumps. Double skinned construction for energy saving and quiet operation.

Covered by Electrolux Platinum Star® Service Program two-year parts and one-year labor warranty, installation start-up and performance check-up after one year from installation.

INTERTEK ETL LISTED C US INTERTEK ETL SANITATION LISTED 3048424

ENERGY STAR

Approval: _____

Main features

- Built-in booster heater sized to raise incoming 110 °F water to 180 °F for sanitizing rinse. No external booster heater required.
- Unique temperature interlock guarantees required sanitizing temperatures thereby ensuring that NSF mandated temperatures are maintained.
- "Wash Safe Control" LED light will supply visual control to operators that all items washed have been sanitized. "Green" light will be displayed on control panel at the end of the cycle indicating that all items have been sanitized.
- Requires only 0.89 gallon of water per rack.
- Maximum capacity of 30 racks per hour.
- Can be utilized as a dishwasher and glasswasher.
- 120 / 180 / 240 seconds automatic cycles.
- Automatic fill of wash tank to be recirculated each wash cycle.
- Automatic start on push button.
- Soft start of wash pump to protect delicate items.
- Built in detergent and rinse-aid dispensers.
- Rinse cycle refreshes wash water and tank heat.
- Cycle may be interrupted at any time by door opening.
- Utilizes fresh hot water sanitizing rinse.
- Heavy-duty stainless steel construction.
- Internal cavity as well as exterior panels are all 304 series stainless steel.
- Double skin construction for quiet operation.
- Revolving stainless steel wash/rinse arms above and below the rack.
- Interchangeable wash/rinse arms screw out for simple clean up.
- Primary and secondary strainers for enhanced particle filtering.
- Height adjustable feet.
- 1″ stainless steel top can be removed if extra space in height is needed.
- Compact size allows for built-in or freestanding installation.
- State-of-the-art electronic controls with built-in programming, self-diagnostics for serviceability and automatic interior rinse-down cycle.
- Digital read-out keeps operator informed as to cycle status and temperatures.
- Element protection from dry fire and low water.
- Separate drain pump controls water level in the wash tank draining to a maximum height of 39″.
- Utilizes 20″ by 20″ racks for ease of operation (two cutlery boxes, one pegged and one flat rack included).
- Equipped with 6-foot flexible fill and drain hoses and electric cable.
- 1 HP single phase wash pump motor.
- Single phase voltage, field convertible to three phase.

Optional Accessories

- Set of 4 castors.
- Drain water tempering kit.

Electrolux Professional, Inc.
www.electroluxusa.com/professional
10200 David Taylor Drive, Charlotte, NC 28262 • Telephone Number: 866-449-4200 • Fax Number: 704-547-7401

Electrolux
Warewashing Undercounter Dishwasher WT30 Energy Star

Electrolux

Warewashing
Undercounter Dishwasher
WT30 Energy Star

Front View

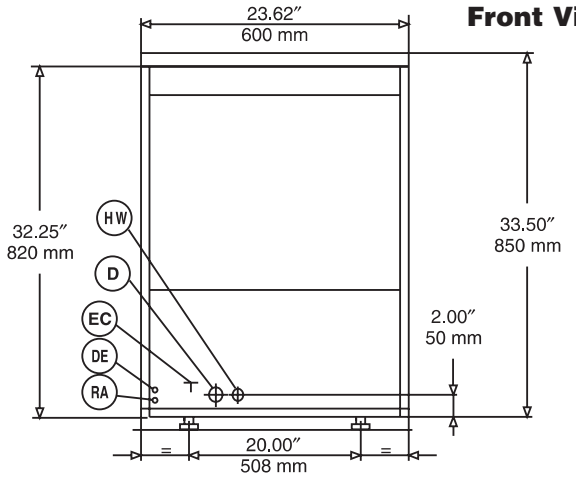

Top View

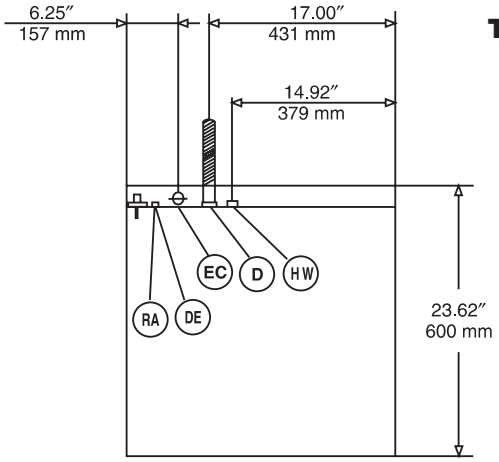

EC = Electrical connection
HW = Hot water inlet
D = Water drain
DE = Detergent dispenser connection
RA = Rinse aid connection

Side View

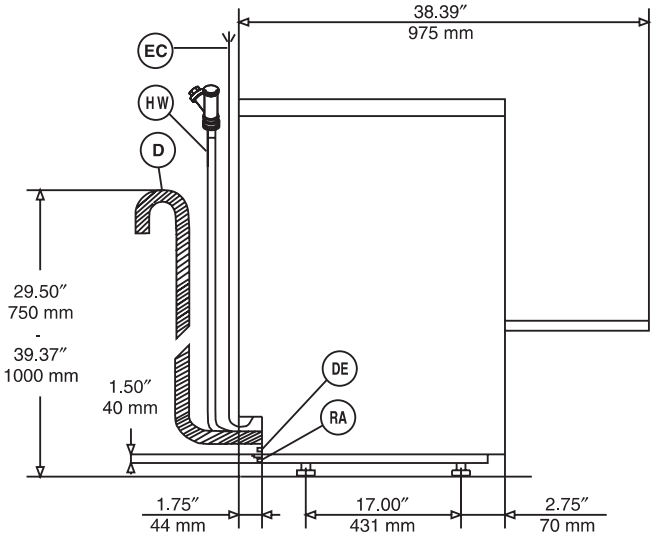

Electric

Supply voltage:	
502315 (WT30H208DU)	208 V/1p/60Hz - 34A
	208 V/3ph/60Hz - 20A
502316 (WT30H240DU)	240 V/1p/60Hz - 30A
	240 V/3p/60Hz - 18A
Total Watts:	6.85 kW
Booster heating elements:	6.0 kW
Tank heating elements:	2.2 kW
Wash pump size:	1 hp

6 ft. Electric cable included.
Conversion from single to three phase can be performed on site.

Water

Water supply pressure:	7.25 – 101 psi (50 – 700 kPa)
Water supply temperature:	110 °F (40 °C) Colder incoming water supply may lengthen wash cycle time.
Water supply hardness:	4-8 gpg (7-14 °fH) max
Gallons per cycle:	0.89 gallons (3.4 liters)
Gallons per hour:	30 gallons (115 liters) (2 minute cycle)
Initial fill water consumption:	6 gallons (23 liters)
Booster Capacity:	3 gallons (12 liters)
Tank Capacity:	6 gallons (23 liters)
Incoming water line size:	G ¾″
Drain line size:	0.7″ (18 mm) pumped drain
Maximum drain height:	39″ (1000 mm) MAX

6 ft. Stainless steel flexible water fill hose included
6 ft. flexible drain hose included

Key Information

N° of cycles:	3 (120, 180 and 240 seconds)
Racks per hour:	30 (2 minute cycle)
Dishes per hour:	540 (18 dishes/rack)
Wash temperature:	150 °F (66 °C) MIN
Rinse temperature:	180 °F (82.5 °C) MIN
Minimum rinse cycle:	13 seconds
Noise level:	<65 dB
Inside Clearance (width):	19-11/16″ (500 mm)
Inside Clearance (depth):	19-11/16″ (500 mm)
Inside Clearance (height):	13-3/16″ (335 mm)
Net weight:	150 lb (68 kg)
Shipping weight:	181 lb (82 kg)
Shipping width:	27-15/16″ (710 mm)
Shipping depth:	30-11/16″ (780 mm)
Shipping height:	41-3/4″ (1060 mm)
Shipping volume:	20 cu.ft (0.59 m3)

Detergent and rinse aid dispensers included.

The company reserves the right to make modifications to the products without prior notice. All information correct at time of printing.

5-12-11