Electrolux

Warewashing
Hood Type Dishwasher
WT65 Energy Star

ITEM # _____

MODEL # _____

PROJECT NAME # _____

SIS # _____

AIA # _____

Hood Type Dishwasher WT65 Energy Star

504199 (WT65H208DU) Hood Type Dishwasher - 208 V
504200 (WT65H240DU) Hood Type Dishwasher - 240 V

Short Form Specification

Item No. _____

Unit shall be Electrolux WT65 upright Hood Type hot water sanitizing dishmachine with Energy Star approvals. Electrical characteristics to be ___208 or ___240 volts three phase operation with four automatic cycles of 60/70/120 seconds and infinte cycle using 0.89 gallons of fresh 180 °F final rinse water per rack. Rinse temperature and pressure guaranteed by built-in 40 °F rise hot water booster heater and built in rinse booster pump. Washing performance is guaranteed by a powerful 2 HP wash pump, upper and lower stainless steel revolving washing spray arms. Unit to feature "Wash Safe Control" LED light. "Green" light will indicate that all items washed have been properly sanitized. 304 stainless steel construction to include hood, frame, wash tank, insulated booster tank and side panels. Unit shall be field convertible from straight to corner operation. The unit shall include drain pump, detergent and rinse aid dispenser pumps. Double skinned hood construction for energy saving and quite operation.

Covered by Electrolux Platinum Star® Service Program two-year parts and one-year labor warranty, installation start-up and performance check-up after one year from installation.

INTERTEK ETL LISTED C US INTERTEK ETL SANITATION LISTED 3048424

ENERGY STAR

Approval: _____

Main features

- Built-in booster heater sized to raise incoming 120 °F water to 180 °F minimum for sanitizing rinse. No external booster is required.
- Constant temperature above 180 °F throughout the rinsing cycle thereby ensuring that NSF mandated temperatures are maintained.
- Unique temperature interlock guarantees required sanitizing temperatures in both the wash and final rinse.
- "Wash Safe Control" LED light will supply visual control to operators that all washed items have been sanitized. "Green" light will be displayed on control panel at the end of the cycle indicating that all items have been sanitized.
- Requires only 0.89 gallons of water per rack.
- Maximum capacity of 60 racks per hour.
- 60/70/120 seconds and infinite totally automatic cycle.
- Automatic fill of wash tank to be recirculated during each wash cycle.
- Automatic start on hood closure.
- Automatic cycle.
- Rinse cycle refreshes wash water and tank heat.
- Cycle may be interrupted at any time by door opening.
- Heavy duty stainless steel construction.
- Internal cavity as well as exterior panels are all 304 series stainless steel.
- Utilizes fresh hot water sanitizing rinse.
- Double skinned hood construction for quiet operation.
- Special designed stainless steel nozzles provide superior cleaning action.
- Revolving stainless steel wash/rinse arms above and below the rack.
- Interchangeable wash/rinse arms screw out for simple clean up.
- Primary and secondary strainers for enhanced soil filtering.
- Height adjustable feet.
- State-of-the-art electronic controls with built-in programming, self-diagnostics for serviceability and automatic interior rinse-down cycle.
- Digital read-out keeps operator informed as to cycle status as well as temperatures.
- Element protection from dry fire and low water.
- Detergent / rinse additive signal connection box.
- Utilizes standard 20″ by 20″ racks for ease of operation (two cutlery boxes, one pegged and one flat rack included).
- Separate drain pump controls water level in the wash tank as well as machine draining.
- 16-1/16″ door opening accepts 18″ trays.
- Field convertible from straight to corner operation.
- Equipped with 6-foot flexible fill and drain hoses.
- 2 HP three phase type motor.
- 208 V/3p/60Hz or 240 V/3p/60Hz electrical specification.

Option Accessories

- Drain water tempering kit.

Electrolux Professional, Inc.
www.electroluxusa.com/professional
10200 David Taylor Drive, Charlotte, NC 28262 • Telephone Number: 866-449-4200 • Fax Number: 704-547-7401

Electrolux
Warewashing
Hood Type Dishwasher WT65 Energy Star

Electrolux

Warewashing
Hood Type Dishwasher
WT65 Energy Star

Front View

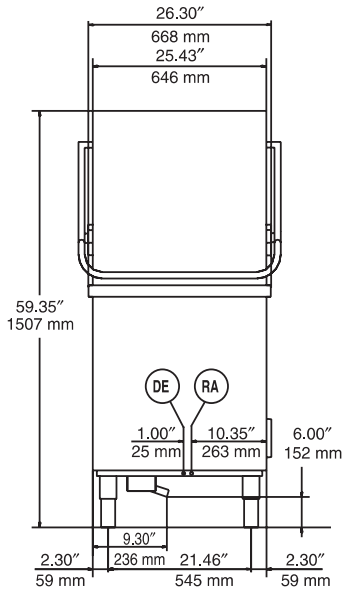

Top View

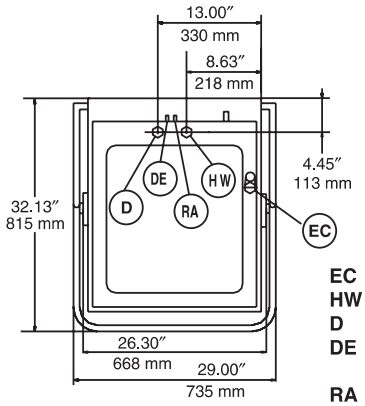

EC = Electrical connection
HW = Hot water inlet
D = Water drain
DE = Detergent dispenser connection
RA = Rinse aid connection

Side View

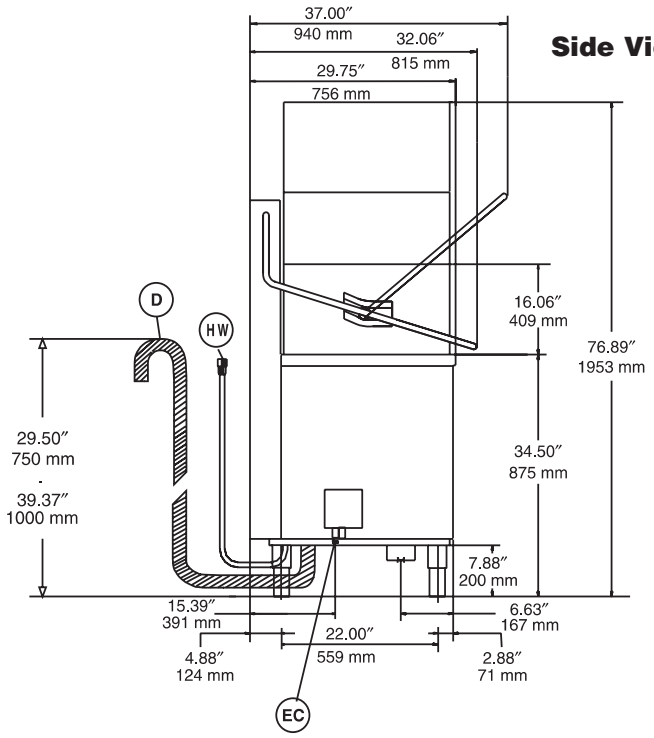

Electric

Supply voltage:	
504199 (WT65H208DU)	208 V/3p/60Hz - 40A
504200 (WT65H240DU)	240 V/3p/60Hz - 32A
Total Watts:	13.6 kW
Booster heating elements:	12 kW
Tank heating elements:	3 kW
Wash pump size:	2 hp

Water

Water supply pressure:	7.25 – 101 psi (50 – 700 kPa)
Water supply temperature:	120 °F (50 °C) Colder incoming water supply may lengthen wash cycle time.
Water supply hardness:	70 - 140 ppm (7 - 14 °fH) MAX
Gallons per cycle:	0.89 gallons (3.4 liters)
Gallons per hour:	60 gallons (227 liters) (60 second cycle)
Minimum rinse cycle:	13 seconds
Initial fill water consumption:	11 gallons (42 liters)
Booster Capacity:	3 gallons (12 liters)
Tank Capacity:	11 gallons (42 liters)
Incoming water line size:	G 3/4″
Drain line size:	0.7" (18 mm) pumped drain
Maximum drain height:	39" (1000 mm) MAX

6 ft. Stainless steel flexible water fill hose included

6 ft. flexible drain hose included

Key Information

N° of cycles:	4 (60, 70, 120 seconds and infinite)
Racks per hour:	60 (60 second cycle)
Dishes per hour:	1080 (18 dishes/rack)
Wash temperature:	150 °F (66 °C) MIN
Rinse temperature:	180 °F (82.5 °C) MIN
Noise level:	<65 dB
Door opening height:	16-1/16″
Net weight:	282 lb (128 kg)
Shipping weight:	360 lb (163 kg)
Shipping width:	33-1/16″ (840 mm)
Shipping depth:	36-5/8″ (930 mm)
Shipping height:	74-7/16″ (1890 mm)
Shipping volume:	52.25 cu.ft (1.48 m3)

Detergent and rinse aid dispensers included.

The company reserves the right to make modifications to the products without prior notice. All information correct at time of printing.

12-18-10

Hoodtype WT65 Recommended Table Details

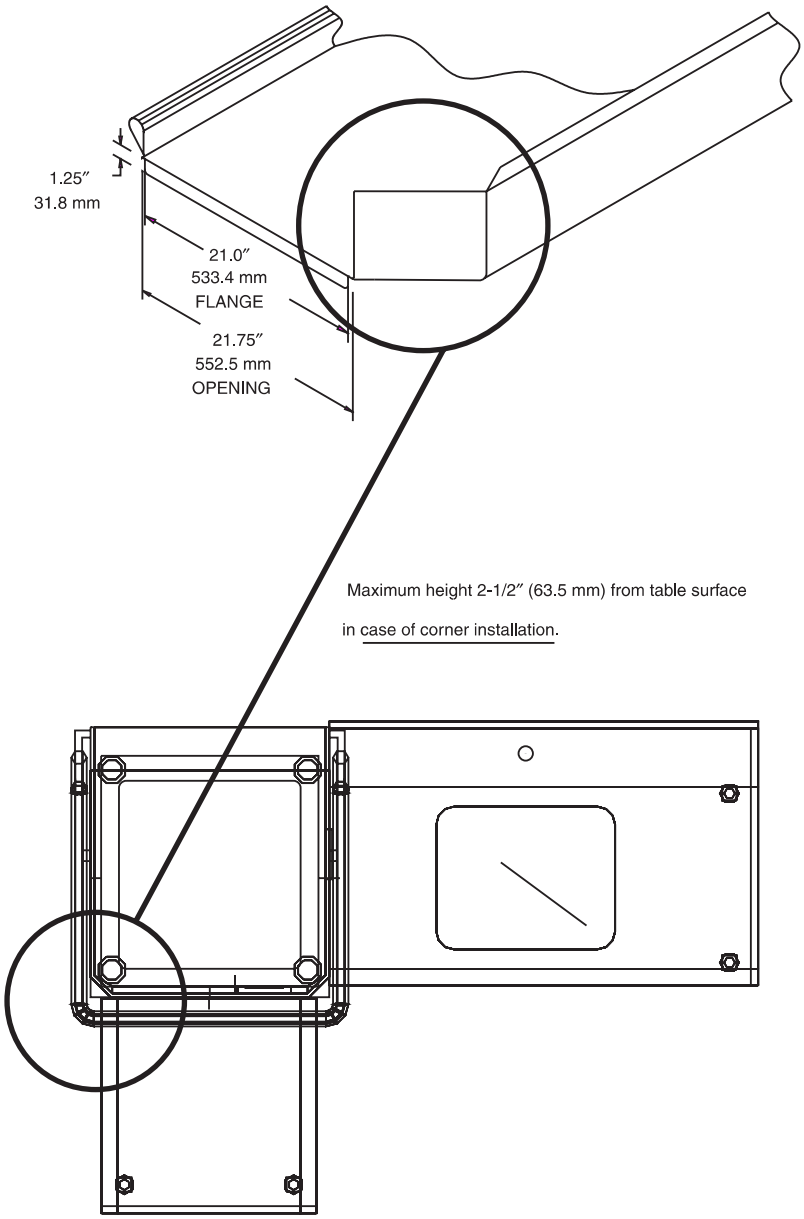

The company reserves the right to make modifications to the products without prior notice. All information correct at time of printing.

7-31-09