Hot Food Wells
Top Mount

PRODUCT: QUANTITY: ITEM#:

Designed Smart.

Model:

☐ TM-90 (without drain) ☐ TM-90-UL (without drain)
☐ TM-90D (with drain) ☐ TM-90D-UL (with drain)
(Specify voltage below):
☐ 120V-750W ☐ 208/240V-1200/1600W
☐ 120V-1200W ☐ 208/240/277V-900/1200/1600W
☐ 208V-1600W

Model:

☐ TM-12 (without drain) ☐ TM-12-UL (without drain)
☐ TM-12D (with drain) ☐ TM-12D-UL (with drain)

Model:

☐ TM-43 (without drain) ☐ TM-43-UL (without drain)
☐ TM-43D (with drain) ☐ TM-43D-UL (with drain)
(Specify voltage below):
☐ 120V-1800W ☐ 208V-1800W

Top Mount Hot Food Well

Bid Specifications

Heavy-duty top mount Uninsulated Rectangular Drop-In Hot Food Well is designed for installation in metal, or wood countertop if optional wood mounting kit is provided. Hot Food Well is designed to accommodate standard size steamtable pans. Well is constructed of deep-drawn 20ga. Type 304 stainless steel, above countertop with 20 ga. aluminized outer housing with sides and bottom fully insulated. Units shipped with drain are provided with stainless steel 1/2" NPT drain welded bottom of pan provided with removable screen. Unit is heated by a tubular heating element shaped in serpentine fashion for even heat distribution to pan base.
Element is mounted under well and secured by aluminized deflector shield for maximum efficiency. Entire heat assembly is covered with galvanized housing with layer of 1" thick fiberglass insulation fixed to bottom of pan with threaded studs for ease of service. Unit standard with APW Wyott E-Z Locks on all four exterior sides for easy installation.
The units are available in a UL Recognized component construction with open wires and increase-decrease plate or complete UL Listed construction including electrical conduit, bezel and control box.

APW Wyott Design Features

- 20 ga. stainless steel well.
- Units may be used WET or DRY. (Wet use offers best results).
- Easy access to heating elements.
- Thermostatic control with 36" capillary (effective length 26").
- Compact housing – overall depth 8-5/16".
- Standard E-Z Lock reduces installation time.
- Large indicating pilot light.

Reliability Backed by APW Wyott's Warranty

- APW Wyott's Food Wells are backed by a 1 year parts & labor warranty.
- Food Wells are Certified by the following agencies:

PROTECTED BY APW WYOTT'S 1 YEAR LIMITED WARRANTY

Sanitation

Models with "UL" listing suffix only

Models without "UL" suffix only

All models except TM-12(D) TM-12(D) UL

Options

- ❑ Stainless steel drain coupling (56420)
- ❑ Thermostat with 72" capillary (effective length 62")
- ❑ Wood mount kit TM-43 (55317)
- ❑ Wood mount kit TM-90 (55313)
- ❑ Recessed bezel (56370)

See reverse side for product specifications.

APW Wyott Foodservice Equipment Company

729 Third Avenue • Dallas, TX 75226 • 800-527-2100 • 1-214-421-7366 • Fax 1-214-565-0976

For more information e-mail us at: Info@APWwyott.com

Rev. 1/1/2003

Hot Food Wells
Top Mount

PRODUCT: QUANTITY: ITEM#:

Top Mount Hot Food Wells

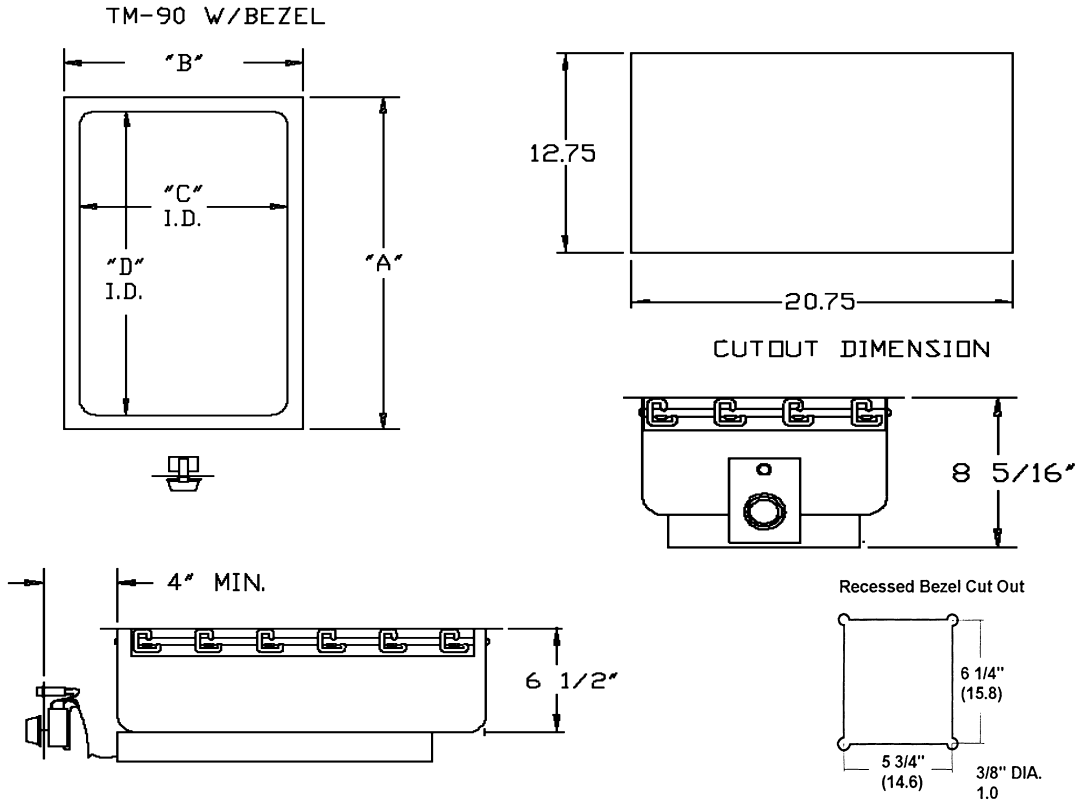

DIMENSIONS				ELECTRICAL			WOOD MOUNT KIT		SHIP WT.
MODEL	OUTSIDE (AxB)	INSIDE (CxD)	CUT-OUT	VOLTS	WATTS	AMPS	CUTOUT	OUTSIDE	
TM-90	8-5/16" H (21.1 cm) 13-5/8" W (34.6 cm) 21-5/8" L (54.9 cm)	6-1/4" H (16.5 cm) 11-7/8" W (30.2 cm) 19-7/8" L (50.5 cm)	12-3/4" W (32.4 cm) 20-3/4" L (52.8 cm)	120 120 208 208/240 208/240/277	750 1200 1600 1200/1600 900/1200/1600	6.3 10.0 7.7 5.8/6.7 4.3/5.0/5.8	14-1/2" W (36.8 cm) 22-1/2" L (57.2 cm)	15-1/4" W (38.7 cm) 23-1/4" L (59.1 cm)	23 LBS. (10.4 Kg) (UL) 22lbs. (10Kg)
TM-43	8-5/16" H (21.1 cm) 13-5/8" W (34.6 cm) 28-9/16" L (72.6 cm)	6-1/4" H (16.5 cm) 11-7/8" W (30.2 cm) 26-7/8" L (68.3 cm)	12-3/4" W (32.4 cm) 27-3/4" L (70.5 cm)	120 208	1800 1800	15.0 8.7	14-5/8" W (37.0 cm) 29-5/8" L (75.2cm)	15-15/16" W (40.5 cm) 30-1/4" L (76.9 cm)	23 LBS. (10.4 Kg) (UL) 23lbs. (10.4 Kg)
TM-12L	8-5/16" H (21.1 cm) 7-11/16" W (4.6 cm) 21-5/8" L (72.6 cm)	6-1/4" H (16.5 cm) 5-15/16" W (15.1 cm) 19-7/8" L (50.5 cm)	6-11/16" W (17.1 cm) 20-13/16" L (52.8 cm)	120	500	4.2	N/A	N/A	12 LBS. (5.5 Kg) (UL) 23lbs. (10.4 Kg)

Top Mount Hot Food Wells

Letters after model number indicate:

- No letter =1" radiused corners, UL recognized
- C–Square corners in well pan
- D–Units with drain
- UL–UL listed units

APW Wyott Foodservice Equipment Company

729 Third Avenue • Dallas, TX 75226 • 800-527-2100 • 1-214-421-7366 • Fax 1-214-565-0976

For more information e-mail us at: Info@APWwyott.com