ALFA EXCLUSIVE

SW6000

Perfect for everything from soup to chili to cheese sauce and it has a host of quality features that make it ideal for daily use.

- *Steel outer shell with easy-to-clean black powder finish*
- *Stainless steel 10.5 Qt. insert included with each unit*
- *Powerful 600 Watt heating element*
- *Easy to use 12 setting thermostat dial*
- *Prominent amber on/off indicator light*
- *Set of product signs and magnetic sign holder*
- *4 Oz. stainless steel ladle included*

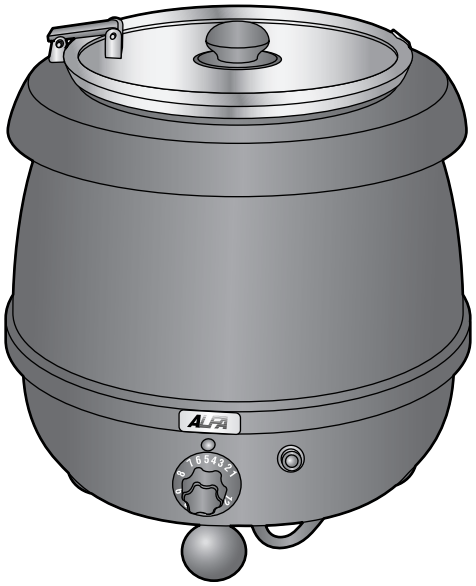

SKS-12

Upscale Version of SW6000 with polished stainless steel collar, black matte finish and enclosed base with rubber non-skid feet. Perfect for everything from soup to chili to cheese sauce and it has a host of quality features that make it ideal for daily use.

- *Steel outer shell with easy-to-clean black powder finish*
- *Stainless steel 10.5 Qt. insert included with each unit*
- *Powerful 600 Watt heating element*
- *Easy to use 12 setting thermostat dial*
- *Prominent amber on/off indicator light*
- *Set of product signs and magnetic sign holder*
- *4 Oz. stainless steel ladle included*

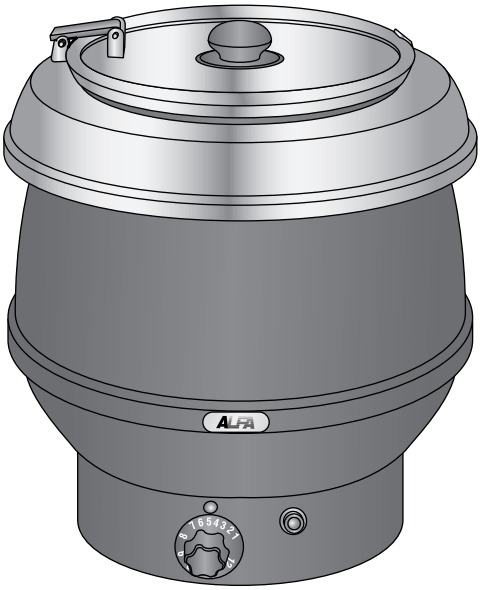

NEW for 2004

ALFA #	DESCRIPTION	DIMENSIONS	WEIGHT
SW6000	Electric Soup Warmer	14" x 14" x 16"	14 Lbs.
SKS-12	Electric Soup Warmer	14" x 14" x 16"	14 Lbs.

- **Electrical Specifications:** 110 volts, 60 cycles, single phase, 5.0 amps

Both Models are available in 220/230 voltage versions by Special Order only