Foodservice Equipment

Job _____ Item# _____

Solid-State Pop-Up Toasters
Bread & Texas Toast Toasters

TP209, TP224, TP409, TP4C09, TP424, TP430

TP209/224

TP409/424/430

Models shown may ship UPS

Application:
Commercial electronic pop-up food toasters are designed to uniformly toast bread, frozen waffles and many other foods consistently.

General Information:
Commercial two and four slot pop-up type bread toaster has toasting slots in the top.

Each slot is:
1-1/8" (28.6mm) Wide x
5-1/4" (133mm) Long
Each toasting chamber is equipped with oven guide wires, and lowering rack.

Model TP Series Toasters Feature:
- Solid state timer control(s)
- Electrical heating elements that provide uniform heat and even toasting
- Operating lever(s) and color selection knob(s)
- Removable crumb tray

Construction:
Construction is of formed and welded sheet steel. Finish is brushed stainless steel with a bright anneal (mirrored) finish on the front panel. A front pullout crumb tray is provided for easy cleaning.

Electrical:
Models are single phase. Toasters are equipped with a two pole switch that energizes the elements when the operating lever is depressed. Toasters are furnished with factory installed 36" cord with NEMA plug.

Heating:
Insulated ceramic etched foil heaters are installed on both sides of each toasting chamber.

Controls:
Each two-slot section is controlled by a lever operated mechanism, it is equipped with color selector knob coupled with solid state controls having temperature and voltage compensators. When operating lever is depressed, bread racks are lowered, and elements are energized simultaneously. At the end of the toasting cycle, elements are de-energized, and bread racks are automatically raised by a coil spring

Capacity:
The two slot toaster will toast 2 slices of bread per load; and up to 150 slices per hour.

Warranty:
Warranted for one year covering parts and labor. Call factory for warranty authorization.

NEMA PLUGS

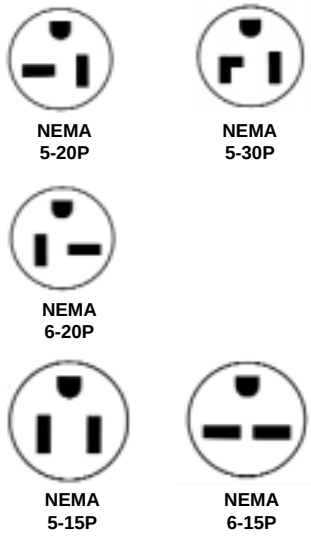

Toastmaster® 5600 13th Street, Menominee, MI 49858 • www.toastmastercorp.com
Toll Free: 1-800-338-9886 • Telephone: 1-906-863-4401 • Fax: 1-906-863-5889

Solid-State Pop-Up Toasters • Bread & Texas Toast Toasters

Bread and Texas Toast Toasters - TP209, TP224, TP409, TP4C09, TP424, TP430

Models shown may ship UPS

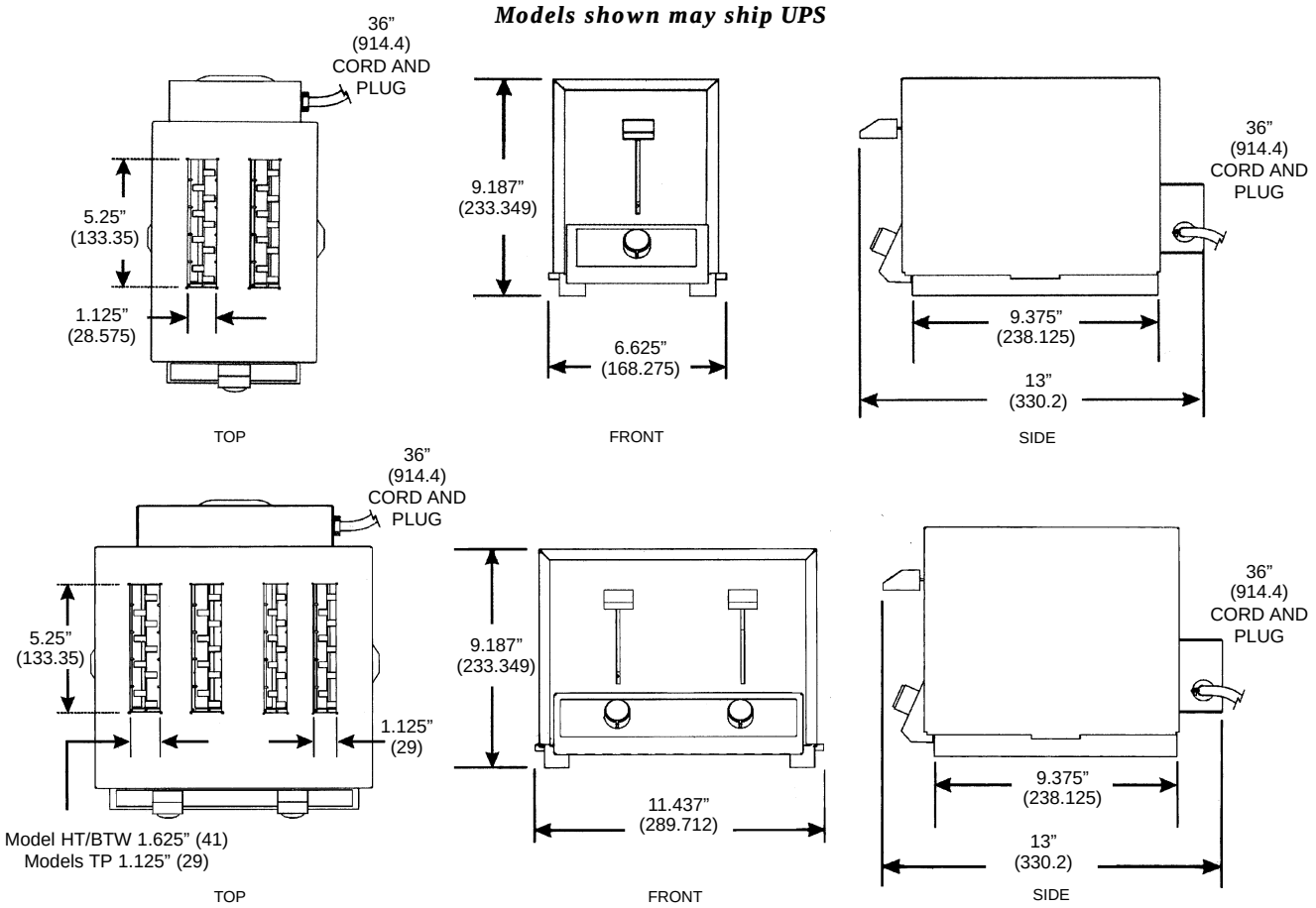

	TWO SLOT		FOUR SLOT			
Model Number	**TP209**	**TP224**	**TP409**	**TP4C09**	**TP424**	**TP430**
Slots	2	2	4	4	4	4
Slices per Hour	150	150	250	250	250/300	250/300
Supply (1 phase)	120 V	208/240 V	120 V	120 V	208/240 V	208 V
Current Draw	9.2 A	4.8/5.4 A	18.3 A	18.3 A	9.6/10.8 A	12.5 A
Rated Heat Input	1.1 KW	1.0/1.3 KW	2.2 KW	2.2 KW	2.0/2.6 KW	2.6 KW
Factory Installed Cord & Plug	NEMA 5-15P	NEMA 6-15P	NEMA 5-20P	NEMA 5-30P	NEMA 6-15P	*(Canada)* NEMA 6-20P
Slot Width	1-1/8"	1-1/8"	1-1/8"	1-1/8"	1-1/8"	1-1/8"
Slot Depth	5-1/4"	5-1/4"	5-1/4"	5-1/4"	5-1/4"	5-1/4"
Width	6-5/8"	6-5/8"	11-7/16"	11-7/16"	11-7/16"	11-7/16"
Depth	13"	13"	13"	13"	13"	13"
Height	9-3/16"	9-3/16"	9-3/16"	9-3/16"	9-3/16"	9-3/16"
Ship Weight	12.3 lbs.	12.3 lbs.	21 lbs.	21 lbs.	21 lbs.	21 lbs.

INTENDED FOR COMMERCIAL USE ONLY. NOT FOR HOUSEHOLD USE.

Toastmaster, in line with its policy to continually improve its product, reserves the right to change materials or specifications without notice. Such revisions do not entitle the buyer to corresponding changes, improvements, additions, or replacements for previously purchased equipment.

THE MIDDLEBY CORPORATION
THE BRAND BEHIND THE BRANDS

Toastmaster® 5600 13th Street, Menominee, MI 49858 • www.toastmastercorp.com
Toll Free: 1-800-338-9886 • Telephone: 1-906-863-4401 • Fax: 1-906-863-5889