NOR-LAKE, INCORPORATED
727 Second Street
P.O. Box 248
Hudson, Wisconsin 54016

800-955-5253
715-386-2323
866-961-5253 Parts
800-388-5253 Service
715-386-6149 FAX
www.norlake.com

NORLAKE®

ADVANTEDGE™ PIZZA PREP TABLE

NLPT67

PROJECT:

.....

ITEM NUMBER:

.....

MODEL NUMBER:

.....

PIZZA PREP TABLE

SPECIFICATIONS FOR: NLPT44, NLPT67, NLPT93

- Finish: Stainless steel interior and exterior. Aluminum back and galvanized bottom.
- Insulation: The complete cabinet and doors are foamed-in-place with polyurethane insulation. Insulated covers on rail.
- Hardware: Curved handle with recessed pocket, two vinyl coated shelves per door adjustable in 1/2" increments, 6" casters, self-closing doors, 19" reversible cutting board, 1/3 size pans.
- Electrical: 115 volt, 60 Hz, 1 phase with cord and NEMA 5-15P plug.
- Refrigeration: Self contained forced air R-134a capillary tube refrigeration system for NLPT44 and NLPT67, R-404A for NLPT93. Automatic defrost and condensate evaporator requires no plumbing. Adjustable temperature control. Temperature range: 32°F to 40°F.
- Approvals: UL, C-UL and ETL Sanitation listed.

STANDARD FEATURES

- Air cooled condensing unit
- Automatic condensate vaporizer
- Automatic defrost
- Capillary tube system
- Interior temperature indicator
- Adjustable temperature control
- Insulated rail covers with hold open hinges
- Self closing doors with magnetic gasket
- Stainless steel interior
- Stainless steel exterior (aluminum back, galvanized bottom)
- 1/3 size pans provided
- 6" casters
- 19" reversible cutting board
- UL, C-UL and ETL Sanitation
- Warranties: 1 Year Parts & Labor, 5 Year Compressor

UL REGISTERED FIRM

Nor-Lake, Inc.
Registered to ISO 9001:2008
File No. 10001816

*Most options are available one week from receipt of order. Please contact us for specific questions.

SPECIFICATION GUIDE

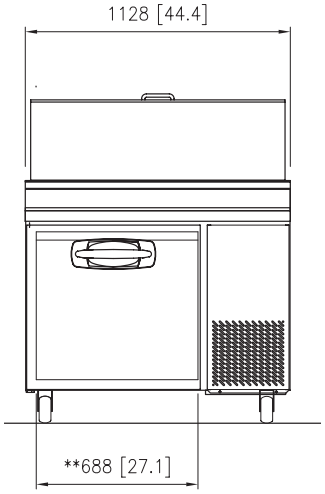

NLPT44

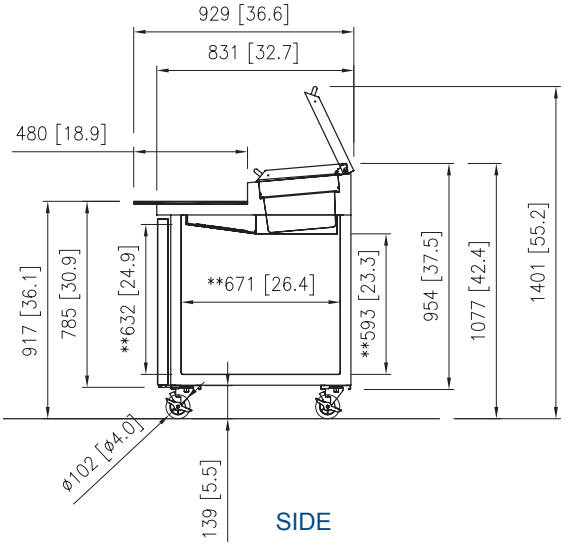

SIDE

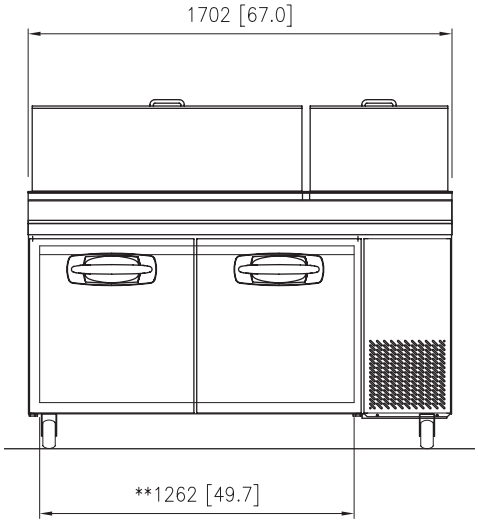

NLPT67

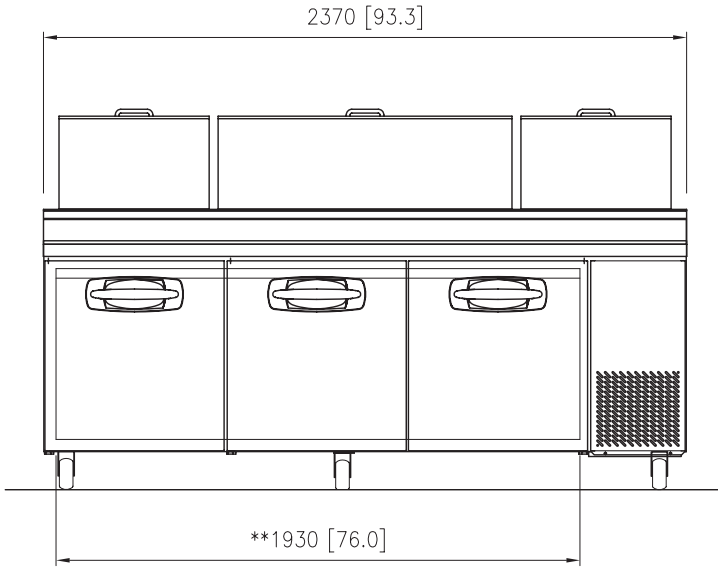

NLPT93

SPECIFICATIONS

Model	NLPT44	NLPT67	NLPT93
Crated Height	43.7"	43.7"	43.7"
Crated Width	48.6"	71.2"	97.5"
Crated Depth	36.8"	36.8"	36.8"
Crated Weight (lbs.)	309	548	698
Interior Height	23.3"	23.3"	23.3"
Interior Width	27.1"	49.7"	76"
Interior Depth	26.4"	26.4"	26.4"
Overall Height	42.4"	42.4"	42.4"
Overall Width	44.4"	67"	93.3"
Overall Depth	36.6"	36.6"	36.6"
Gross Cubage (ft.^{3})	9.7	17.8	27.2
Number of 1/3 Pans	6	9	12
Number of Shelves	2	4	6
Number of Casters	4	4	6
Condensing Unit Size	3/8 HP	3/8 HP	1/2 HP
Refrigerant	R-134A	R-134A	R-404A
Electrical Characteristics	115/60/1	115/60/1	115/60/1
Cord and Plug Furnished	Yes	Yes	Yes
Nema Plug Configuration	5-15P	5-15P	5-15P
Total Amp Draw	6.5	6.5	7.5

Specifications subject to change without notice.

NORLAKE®

Standex
Food Service Equipment Group

Revision: 07/11
©2011 Nor-Lake, Inc.
Printed in the USA
Part Number: 143462