Project _____ Item # _____ Quantity _____

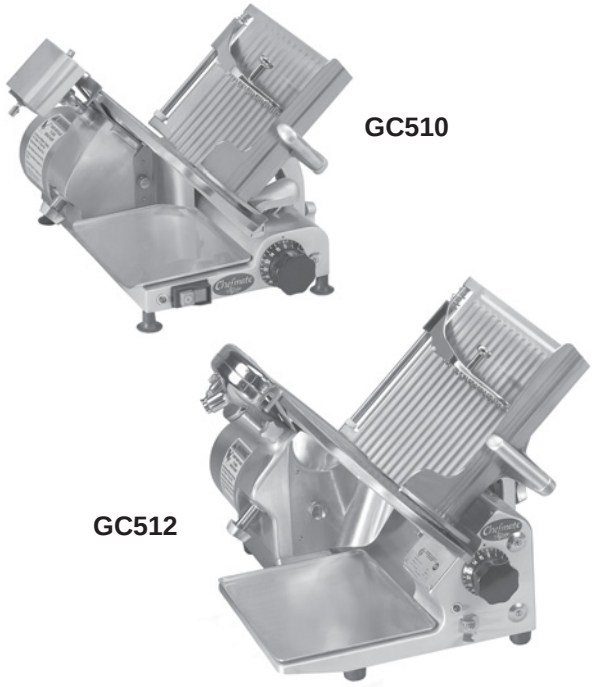

GC510/GC512 Compact Manual Slicers

Chefmate Models

- ❑ GC510 - 10” Compact Manual Slicer
- ❑ GC512 - 12” Compact Manual Slicer

(GC510) (GC512)

Standard Features

- Gear driven
- 1/4 HP (GC510) or 1/3 HP (GC512) knife motor
- Knife cover interlock
- Stainless steel food contact areas
  - Food chute
  - Slicer table
  - Knife cover
  - Knife
  - Slice deflector
  - Motor cover
  - Removable receiving tray
- Anodized aluminum base
- Full gravity feed food chute
- Permanently attached all metal knife sharpener
- Permanently attached knife ring guard
- Power indicator light
- 6 foot cord and plug

Options and Accessories

- ❑ Vegetable hopper (GC512)

Standard Warranty

- 1 year parts and labor (onsite)

Approved By:_____

Date:_____

GLOBE FOOD EQUIPMENT COMPANY
www.globeslicers.com

P.O. Box 3209
Dayton, OH 45401
Phone: 937-299-5493
Phone: 800-347-5423
Fax: 937-299-4147

Compact Manual Slicers GC510/GC512

Specifications

Finish: The slicer base is heavy gauge anodized aluminum that is stain resistant, long lasting, and easy to clean. Stainless steel parts include the food chute, slicer table, knife cover, knife, slice deflector, motor cover, and removable product receiving tray.

Motor: Totally enclosed, permanently lubricated sealed ball bearings.
GC510: 1/4 HP, 115-60-1, 2.7 amps
GC512: 1/3 HP, 115-60-1, 4.8 amps

Knife Drive: Helical cut motor gear of highly polished steel pinion meshing with a nylon gear.

Slice Thickness: Precision adjustment holds thickness setting for consistent cuts.
GC510: tissue thin to 5/8" thick
GC512: tissue thin to 7/8" thick

Full Gravity Feed: Requires less mechanical or spring loaded pressure. Equipped with a chrome plated end weight that swings away for storage behind the food chute.

On/Off Controls:
GC510: Water protected separate on/off push button type.
GC512: Water protected toggle switch type.

Knife Cover Interlock: Slicer will not operate with the knife cover removed.

Knife Ring Guard:
Permanently mounted, stainless steel knife ring guard protects the non-slicing portion of the knife. Slicer table protects leading edge of the knife when completely closed.

Top Mounted Sharpener:
Sharpener is made of all metal and is permanently mounted on the slicer. Large grinding and honing stones return a razor sharp edge to the knife.

Knife: Stainless steel knife provides long life and maintains a razor sharp edge.
GC510: Nominal 10" diameter
GC512: Nominal 12" diameter

Capacity:
GC510: 5"H x 7 3/4" W or 6 1/2" Dia. (12.7cm x 19.7cm or 16.5cm)
GC512: 5 1/4"H x 9 1/2" W or 8" Dia. (13.3cm x 24.1cm or 20.3cm)

Power Indicator Light: A readily visible light illuminates when the knife is rotating.

Slice Deflector: Heavy duty deflector is securely fastened to the slicer, yet is still easy to remove without tools.

Cord & Plug: Attached 6 foot flexible 3 wire cord and plug fits a grounded receptacle.

Rubber Feet: Supplied with nonslip rubber feet.

Dimensions: (GC510)
Overall Length = 22" (56cm)
Overall Width = 16" (41cm)
Overall Height = 15" (38cm)
Freight Class: 77.5
Net Weight: 49 lbs. (22kgs.)
Shipping Weight: 67 lbs. (30kgs.)
Box Dimensions:
27"W x 21"D x 20"H
(68.6cm W x 53.3cm D x 50.8cm H)

Dimensions: (GC512)
Overall Length = 25" (63cm)
Overall Width = 19 3/4" (50cm)
Overall Height = 19 1/2" (49cm)
Freight Class: 77.5
Net Weight: 93 lbs. (42kgs.)
Shipping Weight: 110 lbs. (50kgs.)
Box Dimensions:
26"W x 22"D x 27"H
(66cm W x 56cm D x 68cm H)

Accessories:
A420VH Vegetable hopper (GC512 only)

GLOBE FOOD EQUIPMENT COMPANY
www.globeslicers.com

P.O. Box 3209
Dayton, OH 45401
Phone: 937-299-5493
Phone: 800-347-5423
Fax: 937-299-4147

Printed in U.S.A. 1-2005

Specifications are subject to change without notice.