NOR-LAKE, INCORPORATED
727 Second Street
P.O. Box 248
Hudson, Wisconsin 54016

800-955-5253
715-386-2323
866-961-5253 Parts
800-388-5253 Service
715-386-6149 FAX
www.norlake.com

NORLAKE®

ADVANTEDGE™ UNDERCOUNTER / WORKTABLE FREEZERS

NLUF60

PROJECT:

.....

ITEM NUMBER:

.....

MODEL NUMBER:

.....

SPECIFICATIONS FOR: NLUF27, NLUF48, NLUF60

- Finish: Stainless steel interior and exterior.
- Insulation: The complete cabinet and doors are foamed-in-place with polyurethane insulation.
- Hardware: Curved handle with recessed pocket with one vinyl coated shelf per door, 6" diameter casters standard.
- Electrical: 115 volt, 60 Hz, 1 phase with cord and plug.
- Refrigeration: Self contained forced air refrigeration system. The condensate is collected and automatically evaporated from an energy efficient hot gas style vaporizer. Refrigerant flow is controlled by a capillary tube. R-134a refrigerant for NLUF27 and R-404A for NLUF48, NLUF60. Temperature range: -1°F to -11°F.
- Approvals: UL, C-UL and ETL Sanitation.

STANDARD FEATURES

- Air cooled condensing unit
- Automatic condensate vaporizer
- Automatic defrost
- Capillary tube system
- Casters standard
- Curved handle with recessed pocket
- Magnetic gaskets
- Self closing doors
- Stainless steel interior and exterior
- UL, C-UL and ETL sanitation
- Vinyl coated shelves
- Warranties: 1 Year Parts & Labor,
- 5 Year Compressor

OPTIONAL FEATURES*

- Additional shelves
- Low profile casters
- Backsplash
- Overshelf assemblies

UL REGISTERED FIRM

Nor-Lake, Inc.
Registered to ISO 9001:2008
File No. 10001816

*Most options are available one week from receipt of order. Please contact us for specific questions.
**C-UL is Underwriters Laboratories Safety Certification Mark which indicates that UL has tested the equipment to applicable CSA Standards.

ADVANTEDGE™ UNDERCOUNTER / WORKTABLE FREEZERS

SPECIFICATION GUIDE

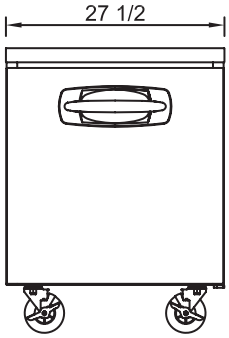

FRONT

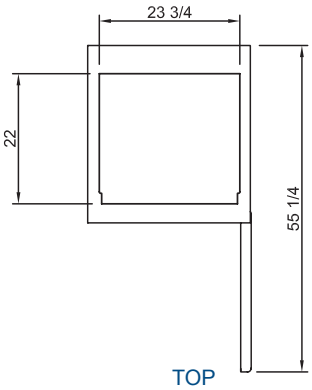

TOP

NLUF27

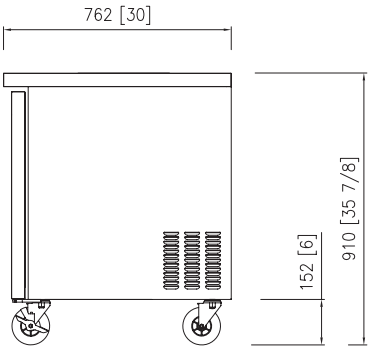

SIDE

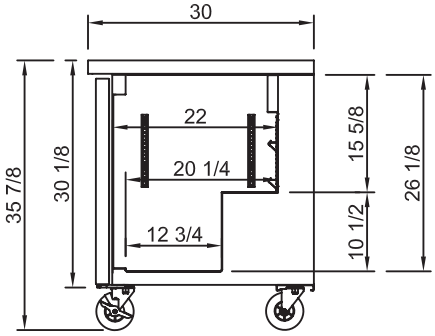

SIDE INTERIOR

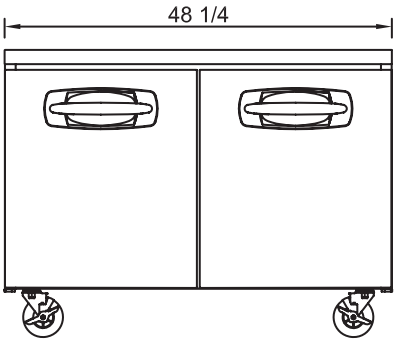

NLUF48 FRONT

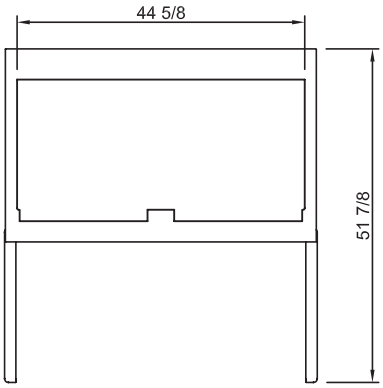

NLUF48 TOP

SPECIFICATIONS

Model	NLUF27	NLUF48	NLUF60
Crated Height	36-1/4"	36-1/4"	36-1/4"
Crated Width	30-1/8"	51-1/8"	63"
Crated Depth	33-1/2"	33-1/2"	33-1/2"
Crated Weight (lbs.)	207	298	350
Interior Height	26-1/8"	26-1/8"	26-1/8"
Interior Width	23-3/4"	44-5/8"	56-3/4"
Interior Depth	20-1/4"	20-1/4"	20-1/4"
Overall Height	35-7/8"	35-7/8"	35-7/8"
Overall Width	27-1/2"	48-1/4"	60-3/8"
Overall Depth	30"	30"	30"
Gross Cubage (ft.^{3})	7	13	16
Number of Shelves	1	2	2
Number of Casters	4	4	4
Condensing Unit Size	3/8 HP	1/2 HP	1/2 HP
Refrigerant	R-134a	R-404A	R-404A
Electrical Characteristics	115/60/1	115/60/1	115/60/1
Cord and Plug Furnished	Yes	Yes	Yes
Nema Plug Configuration	5-15P	5-15P	5-15P
Total Amp Draw	8.3	8.9	8.9

Specifications subject to change without notice.

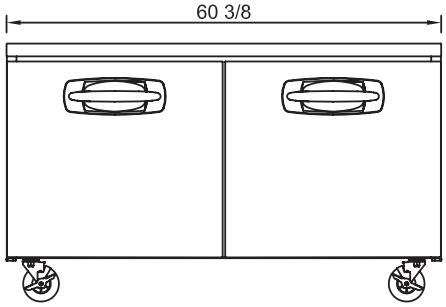

FRONT

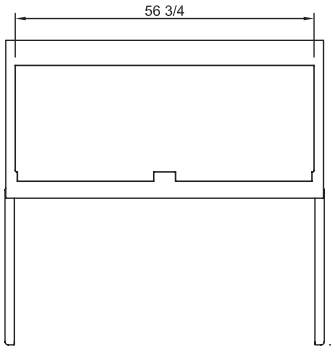

TOP

NLUF60

Standex
Food Service Equipment Group

NORLAKE®

Revision: 04/11
©2011 Nor-Lake, Inc.
Printed in the USA
Part Number: 146623