Concession Equipment Supreme™ Cheese Servers

Models FS-SS FSPW-SS FSPWI-SS

Date: Project: Quantity: Item Number:

FSPW-SS #81140—CHSE

FS-SS #86500—CHSE

NSF c UL US LISTED CE Units Available

Warranty

Server Products equipment is backed by a two-year limited warranty against defects in materials and workmanship. For a copy of our complete warranty statement, see our Website or contact us.

Bid Description

Redesigned with contemporary styling, Supreme™ cheese servers feature rounded corners and are constructed of brushed (#4) stainless steel bodies with black thermoset plastic bottom and top. Each dispense directly from a 3-quart (2.8 L) stainless steel jar. Pumps feature a cast valve body and welded construction. Maximum stroke yields 1-ounce (30 mL). Gauging collars are supplied to reduce the yield in ¼-ounce (7 mL) increments.

An adjustable, precalibrated thermostat controls the heating element. Each feature a "Power On" light and water fill line. To include a magnetic merchandising sign, add the suffix CHSE for cheese.

The FSPW-SS is designed with pump and spout warmer opposite the instrument panel side. FSPWI-SS has spout warmer on the instrument panel side. Each has 515 watts.

FS-SS is without pump—includes a 1-ounce (30-mL) ladle and has 500 watts.

Standard Features

Pump design prevents loss of valve balls

Maximum pump stroke yields 1-ounce (30 mL) with portion control in ¼-ounce (7 mL) increments

Adjustable, precalibrated thermostat for accurate heat control

Temperature marks on knob with protective knob guard

Water fill line eliminates overflow accidents

Accepts magnetic sign for versatile merchandising

Two cleaning brushes included for pump maintenance

Cheese Server Accessories

- ☐ 3-quart (2.8 L) Stainless Steel Jar #94009
- ☐ Stainless Steel Jar Storage Lid #94008
- ☐ Magnetic Sign, Cheese Nachos #86787
- ☐ 1-ounce (30 mL) 10" (25.4 cm) Ladle #82561

Specifications on reverse side

Concession Equipment Supreme™ Cheese Servers

Models FS-SS FSPW-SS FSPWI-SS

Supreme™ Cheese Server with Spout Warmer and Pump

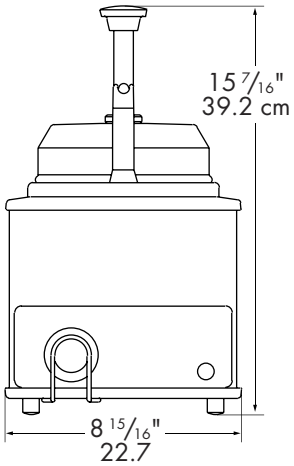

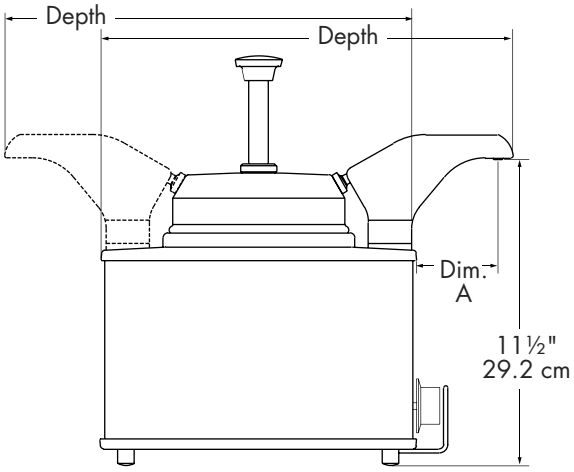

Supreme™ Cheese Server with Ladle

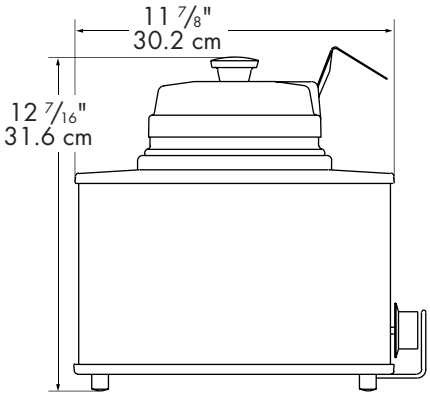

Specifications

Construction	Stainless steel base with black thermoset plastic bottom and top. Pumps feature a rugged cast valve body and welded construction.
Capacity	Stainless steel jar or #10 can holds 3-quarts (2.8 L).
Electrical	120V, 60Hz, 72 in (183 cm) cord set NEMA 5-15P, 15A, 125V PLUG

Models		FSPW-SS #81140	FSPWI-SS #80140	FS-SS #86500
Height	in	15 7/16	15 7/16	12 7/16
	cm	39.2	39.2	31.6
Width	in	8 15/16	8 15/16	8 15/16
	cm	22.7	22.7	22.7
Depth	in	15 ½	15 ½	11 7/8
	cm	39.4	39.4	30.2
Dim. A	in	3 1/16	3 1/16	N/A
	cm	7.8	7.8	
Ship Weight		13 lb	13 lb	12 lb
		5.9 kg	5.9 kg	5.5 kg
Electrical		515 watts	515 watts	500 watts
		4.3 amps	4.3 amps	4.2 amps

FOB Richfield, Wisconsin 53076

CAD Library

We are a member of The KCL CADalog with more than 100 other manufacturers. Our CAD files can be purchased through Kochman Consultants, Ltd. at 847-470-1195, or e-mail sales@kclcad.com. Their Website is at www.kclcad.com.

Server Products, Inc. • P.O. Box 98 • Richfield, WI 53076 • Toll Free: 800-558-8722
P: 262-628-5600 • F: 262-628-5110 • spsales@server-products.com • www.server-products.com

Server Products, Inc. reserves the right to modify specifications without obligation. Printed in USA

7/2004/10M Stock #02013