Mr. Frank™
Hot Dog Display Steamer

PRODUCT: QUANTITY: ITEM #:

Models: ☐ DS-1A 120V ☐ DS-1A 240V ☐ DS-1A 230VCE ☐ DS-1AP 120V

Designed Smart

Leader in "Hot and Fresh" Food Equipment!

- APW Wyott has a wide variety of "Hot and Fresh" Food equipment and the best supporting elements in refrigerated or heated dispensers, pumps and condiment stations.
- The Mr. Frank Hot Dog Display Steamer, when combined with the Condiment Serving Station, is unmatched in building impulse sales and "Hot and Fresh" Food profits (see profit calculator).
- Mr. Frank Hot Dog Steamer features eye-catching hot dog graphics with the new "Hot and Fresh" theme.

Designed to Deliver Great Tasting Hot Dogs!

- Heating system can cook hot dogs in less than 20 minutes and holds them at NSF safe temperatures for serving customers.
- Steamer holds 150 hot dogs and 60 buns.
- Divided steaming pan allows control of steam levels for hot dogs vs. buns.

Easy to Operate and Maintain!

- Steamer heats quickly and has a fast recovery for unexpected surges in hot dog demand.
- Steamer is designed to require minimal labor: Operator can easily access hot dogs and buns through rear doors that open wide.
- Stainless steel interiors and exteriors are easy to clean.
- Steamer has built-in "easy to remove" drip tray for easy cleaning.
- Back drain valve provided to remove excess water in steam tanks.

Built Solid

Built to Last

- Cabinet is constructed of stainless steel for maximum durability.
- Display window is made of tempered glass.

Reliability backed by APW Wyott's Warranty

- All APW Wyott hot dog equipment is backed by a 1-year limited warranty and a 1-year on-site labor warranty.
- Certified by the following agencies:

Model: DS-1A Hot Dog Display Steamer

APW Wyott Supporting Products

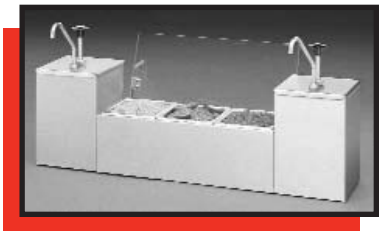

Condiment Serving Station

- Includes two 1-gallon end wells with pumps and a non-refrigerated section of containers.

Refrigerated Condiment Serving Station

- Includes four removable, hinged cover pans.
- Totally refrigerated.

PROTECTED BY APW/WYOTT'S 1 YEAR LIMITED WARRANTY

See reverse side for product specifications.

APW Wyott Foodservice Equipment Company · 729 Third Ave., Dallas, TX 75226
(800) 527-2100 · (214) 421-7366 · Fax (214) 565-0976 · www.apwwyott.com · info@apwwyott.com

Rev. 5/22/2005

Mr. Frank™
Hot Dog Display Steamer

Models: ☐ DS-1A 120V ☐ DS-1A 240V ☐ DS-1A 230VCE ☐ DS-1AP 120V

PRODUCT: QUANTITY: ITEM #:

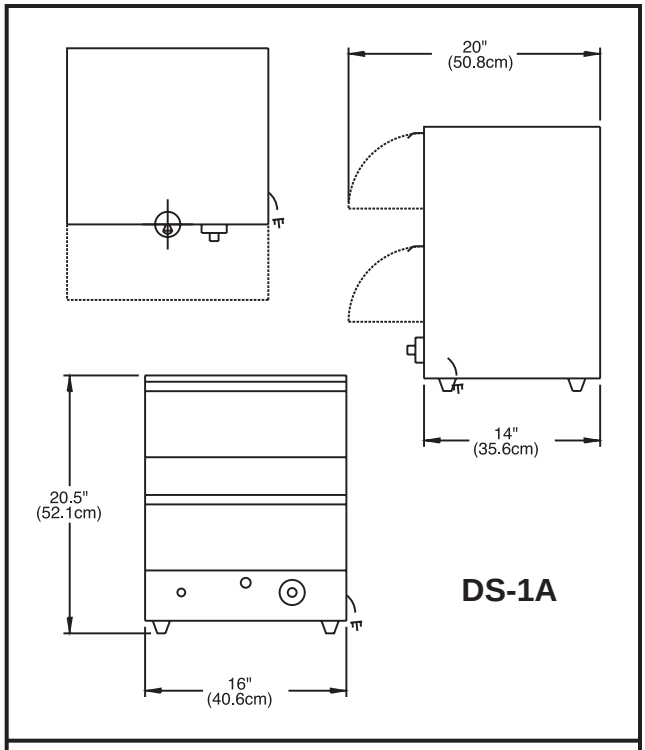

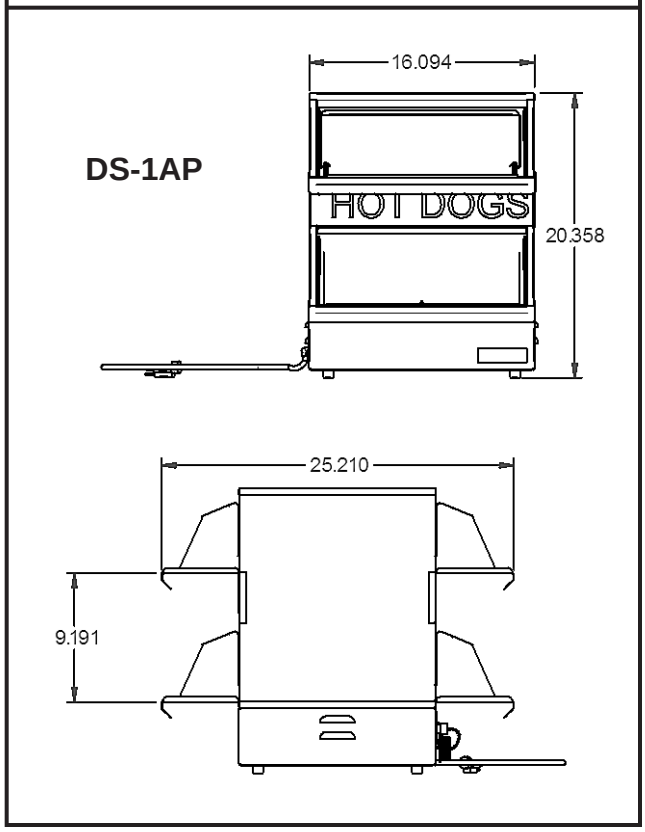

PRODUCT SPECIFICATIONS

Construction:
Stainless steel interior and exterior, tempered glass, 1 inch adjustable legs.

Electrical Information:
Each 120V unit is equipped with at least 60", three grounded power cord which terminates with a standard three-pronged male plug. The 120V unit utilizes a NEMA 5-15P plug. The 240V and 230V unit is provided witha 60" power cord with no plug.

Electrical Specifications:
120V, 800W, 6.7 Amps
240V, 800W, 3.3 Amps
230VCE, 735W, 3.2 Amps

Capacity:
Up to 150 standard hot dogs
Up to 60 standard hot dog buns

Overall Dimensions:
20 1/2"H x 16"W x 14"D
(52cm x 40.6cm x 35.6cm)

Extended Door Width:
DS1A - 20"
DS-1AP - 25 1/4"

Shipping:
42 lbs (19.3 kg)
Freight Class
FOB: Cheyenne, WY

**APW Wyott reserves the right to modify specifications or discontinue models without incurring obligation.*

APW Wyott Foodservice Equipment Company · 729 Third Ave., Dallas, TX 75226
(800) 527-2100 · (214) 421-7366 · Fax (214) 565-0976 · www.apwwyott.com· info@apwwyott.com
Rev. 5/22/2005
#1803