STAR-MAX® MANUAL GAS GRIDDLES

Models 615MD, 624MD, 636MD & 648MD

Features/Benefits:

- ★ Manual control with standing pilot for the budget-minded operator and experienced chefs who prefer the "feel" of a manual control.
- ★ Available in 15", 24", 36" and 48" widths to meet your space and volume requirements.
- ★ Ultra-smooth 3/4" thick polished steel plate for superior heat distribution, fast recovery and energy efficient operation.
- ★ Custom designed 20,000 BTU aluminized steel U-shaped burner every 12" of cooking surface provide even heat distribution
- ★ Heavy-duty body construction with stainless steel front, bull nose and 4-1/2" high tapered splash guard.
- ★ Spatula wide 3-1/4" front grease trough and grease chute for easier cleaning.
- ★ Large 4-1/2 quart stainless steel grease drawer.
- ★ Gas convertible in the field with conversion kit supplied. Units are shipped Natural Gas.
- ★ Heavy-duty 4" adjustable legs to fit your countertop line-up requirements.

Model 636MD

Applications:

Star-Max manual griddles are a perfect match for the budget minded operator. For breakfast, lunch or dinner, the Star-Max™ manual control griddles out-perform the competition.

Quality Construction:

Star-Max griddles feature 3/4" thick polished steel griddle plate, 4-1/2" high wrap-around stainless steel splash guard and 3-1/4" wide front access grease trough with 4-1/2 quart grease drawer capacity. Includes a 20,000 BTU aluminized steel burner every 12" of width controlled by manual control valve with standing pilot light, 3/4" N.P.T. male gas connection with convertible pressure regulator, and 4" adjustable legs. These units are approved for installation within 6" of non-combustible surfaces. Griddles operate on Natural or Propane gas.

Warranty:

Star-Max gas griddles are covered by Star's one year parts and labor warranty.

Model 648MD
with Optional Equipment Stand

GAS-FIRED c UL us LISTED

CLASSIFIED UL EPH

QUALITY MANAGEMENT SYSTEM STAR CERTIFICATION ISO 9001:2000

Star Manufacturing International Inc. - 10 Sunnen Drive - P.O. Box 430129 - St. Louis, MO 63143-3800
Phone: (800) 264-7827 - FAX: (800) 264-6666 - www.star-mfg.com

Star Manufacturing International, Inc

Star-Max® Manual Gas Griddles

STAR-MAX MANUAL GAS GRIDDLES

Models 615MD, 624MD, 636MD & 648MD

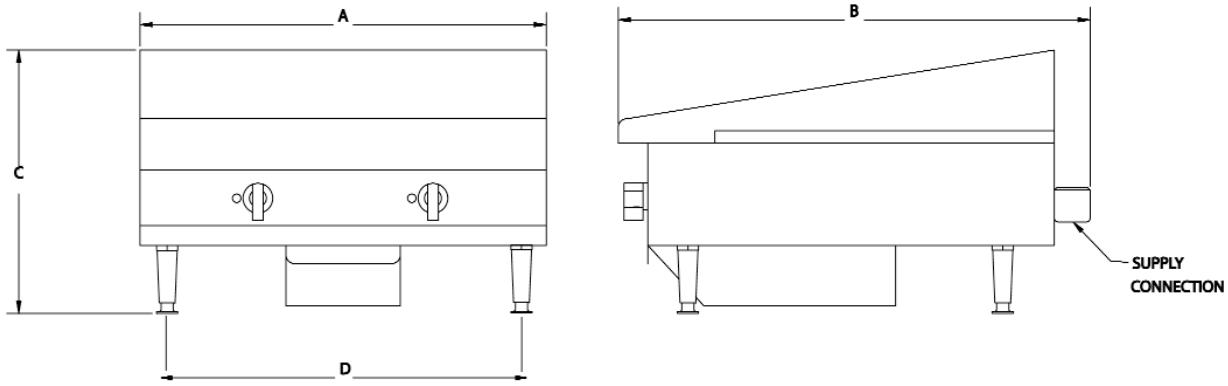

Specifications

Model No.	Dimensions (A) Width Inches (cm)	(B) Depth Inches (cm)	(C) Height Inches (cm)	(D) Leg Width Inches (cm)	Controls	BTU	Grid Area	Plate Thickness Inches (cm)	Approximate Weight Installed lbs. (kg)	Shipping lbs. (kg)
615MD	15 (38.1)	27-3/4 (70.5)	15-1/2 (39.4)	11-3/4 (29.8)	1	20,000	304 sq. in. 1961.4 sq cm	3/4 (1.9)	83 (37.6)	90 (40.8)
624MD	24 (61.0)	27-3/4 (70.5)	15-1/2 (39.4)	20-3/4 (52.7)	2	40,000	498 sq. in. 3213.4 sq cm	3/4 (1.9)	165 (74.8)	175 (79.4)
636MD	36 (91.4)	27-3/4 (70.5)	15-1/2 (39.4)	32-3/4 (83.2)	3	60,000	747 sq. in. 4819.6 sq cm	3/4 (1.9)	247 (112.0)	262 (118.8)
648MD	48 (121.9)	27-3/4 (70.5)	15-1/2 (39.4)	44-3/4 (113.7)	4	80,000	996 sq. in. 6426.2 sq cm	3/4 (1.9)	330 (144.7)	350 (158.8)

Typical Specifications

Gas griddles are constructed with a stainless steel front panel with black polycarbonate trim and double wall aluminized steel side panels. Griddle plate is 3/4" (1.9 cm) thick steel plate with 4-1/2" (11.4 cm) high tapered wrap-around stainless steel splash guard. Unit has 3-1/4" (8.3 cm) wide front grease trough with grease chute and a 4-1/2 qt. (4.257 L) stainless steel grease drawer. Unit is equipped with a 20,000 BTU aluminized steel burner for every 12" (30.5 cm) of width and is controlled by a manual control valve. Valve knobs are protected by a stainless steel bull nose front. A standing pilot is provided. Griddles are supplied with 4" (10.2 cm) high die cast nickel-plated legs have a 1-3/8" (3.5 cm) adjustment. Gas connection is a 3/4" (1.3 cm) N.P.T. male with a convertible pressure regulator. Units are approved for installation within 6" (15.2 cm) of combustible and non-combustible surfaces and are UL Gas Certified NSF and UL Sanitation listed. Printed in the U.S.A.

Due to periodic changes in designs, methods, procedures, policies and regulations, the specifications contained in this sheet are subject to change without notice. While Star Manufacturing exercises good faith efforts to provide information that is accurate, we are not responsible for errors or omissions in information provided or conclusions reached as a result of using the specifications. By using the information provided, the user assumes all risks in connection with such use.

Star Manufacturing International Inc. - 10 Sunnen Drive - P.O. Box 430129 - St. Louis, MO 63143-3800

Phone: (800) 264-7827 - FAX: (800) 264-6666 - www.star-mfg.com