Item #_____

Model X13E

Manual Gravity Feed Slicer

Model X13E

Standard features

- 1-speed, 1/2 HP, permanently lubricated ball bearing knife motor with thermal protection
- Furnished in 115/60/1, 7 amps, AC, with 3 wire cord and plug (see below for optional voltages)
- LED indicates power to the slicer
- One-piece FDA polymer base and product table for reduced seams, accessibility and easy cleaning
- Index knob conveniently located outside the drip zone in the upper left to provide quick and easy access
- Variable pitch barrel cam for ultra fine, precise slice adjustment to a thickness of 1-5/16" (34mm)
- 13" (330mm) diameter, hollow ground, hardened and polished forged stainless steel knife
- Large product table with extra capacity:
  - Rectangles up to 10-½" x 6-¾" (265 mm x 170 mm)
  - Squares up to 7-½" (190 mm)
  - Rounds up to 8-½" (220 mm) diameter
- Articulating and full length rear mounted meat pusher with fence to secure and advance products evenly
- Ergonomic, multi-grip handle to advance product table
- Submersible, removable product table mounted sharpener for consistent sharpening and easy cleaning
- Borazon sharpening stones for fast, accurate sharpening and extended life
- No-volt release requires restarting the slicer after a power interruption
- Permanent ring guard protects entire non-slicing portion of the knife
- Sealed start/stop switches conveniently located on the index knob housing out of the food zone
- Simple kick stand for easy cleaning under the slicer

Features

Berkel model X13E manual gravity feed slicer offers a number of special features. A sanitary one piece engineered polymer base and product table reduces seams and joints while providing an FDA approved surface for easy, effective cleaning. A removable and submersible table mounted sharpener with borazon stones for accurate sharpening. Precise thickness control is achieved using a variable pitch barrel cam for fine adjustment and wafer thin slices. The index knob and operating controls are mounted outside of the drip zone for quick and easy access. A permanent ring guard protects the entire non-slicing portion of the knife during slicing and cleaning. A simple kick stand supports the slicer for easy access to clean under the slicer. A fence is provided for extra holding of small products.

Accessories

- ❑ Vegetable chute with pusher
- ❑ Skewers with coring tool
- ❑ Slaw tray

Approved By:_____
Date_____

Power Options

- ❑ 1/2 HP, 220/50/1, 3.5 amps, AC, ETL Listed
- ❑ 1/2 HP, 220/60/1, 3.5 amps, AC, ETL Listed

Berkel Company • 4406 Technology Drive • South Bend, IN 46628-9700
574-232-8222 • 800-348-0251 • FAX 888-888-2838 • www.berkel.com

Form # SPC34-1106N

Model X13E

Manual Gravity Feed Slicer

Model No.	Cutting Capacity	Slice Thickness	Knife Dia.	Product Dimensions Width A	Depth B	Height C
X13E	Rect. 10-1/2" x 6-3/4" (265 x 170 mm) Square 7-1/2" (190 mm) Round 8-1/2" (220 mm)	1-5/16" (34 mm)	13" (330 mm)	28" (710 mm)	29" (735 mm)	25" (635 mm)

Motor	Electrical	Weight	Box Dimensions Width	Depth	Height
1-speed 1/2 HP	115/60/1 7 amps	Net 86 lb (39 kg) Ship 116 lb (53 kg)	26-1/2" (675 mm)	31" (780 mm)	25-1/2" (650 mm)

SPECIFICATIONS

Motor: 1-speed, 1/2hp totally enclosed and permanently lubricated ball bearings, thermally protected.

Electrical: Furnished in 115/60/1, 7 amps, AC, ETL Listed, with 3-wire cord and plug. Power options noted on page 1.

Finish/Construction: Base, product table, pusher, support arm and upper housing are constructed of FDA approved, engineered polymers reducing the number of seams. Gauge plate and center plate are anodized aluminum. All controls are sealed and located out of the drip zone.

Knife: 13" (330mm) diameter, hollow ground, hardened andpolished stainless steel.

Knife Sharpener: Removable and submersible table mounted, two stone, dual action design to ensure correct pressure and contact angle are always applied, thus reducing knife wear and delivering a perfect edge. Borazon stones last longer, sharpen faster and clean easier.

Thickness Control: Index knob controls a precision, variable pitch barrel cam with ultra-fine adjustment in the first revolution and opens to a thickness of 1-5/16" (34 mm) for accurate and consistent slicing. This control is located out of the drip zone on the upper left to provide quick and easy access for operation and cleaning.

Cutting Capacity: Shown in chart above.

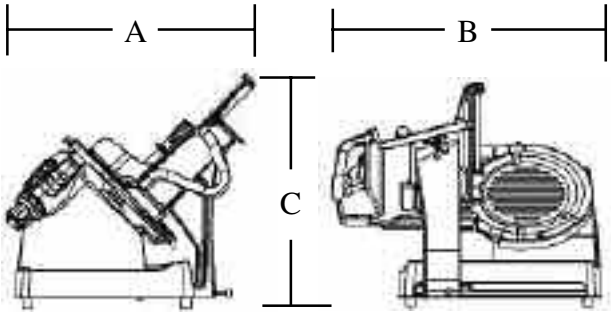

Product Table: Full gravity feed 45° angle with articulating rear mounted pusher that runs the entire length of the table to secure product for increased yield and consistency in every slice. A fence is provided for holding small products.

Kick Stand: A simple kick stand supports the slicer for easy access to clean under the slicer.

No-volt Release: Requires restarting the slicer in the event of a power interruption.

Knife Ring Guard: Permanent tapered guard covers the non-slicing portion of the knife edge.

Controls: Sealed push-button switches located on the index knob housing out of the drip zone.

Warranty: Parts, labor and travel coverage for one year, exclusive of wear items. 3 year replacement guarantee for polymer parts.

As we continually strive to improve our products, specifications are necessarily subject to change without notice.

Berkel Company • 4406 Technology Drive • South Bend, IN 46628-9700
574-232-8222 • 800-348-0251 • FAX 888-888-2838 • www.berkel.com

© 2006 Berkel Company

Litho in USA