Continental

Refrigerator

VALUE LINE FREEZER

Operating with Environmentally Safe, CFC-free R-404A Refrigerant

REACH-IN FREEZERS

1F

3F

2F

Standard Features

- Modern, State-of-the-Art Styling
- Performance Rated Refrigeration System Designed for 0°F Cabinet
- 3" Non-CFC Polyurethane Foam Insulation
- Chrome Plated Flow Line Handles
- Cam-Action Lift-Off Hinges
- Self-Closing Doors
- Automatic Interior Lighting
- Magnetic Snap-In Door Gasket
- Cylinder Lock in Each Door
- Automatic Electric Condensate Evaporator
- 5" Casters
- Heavy-Duty, Epoxy-Coated Steel Shelves
- External Dial Thermometer
- Automatic Electric Defrost

Standard (S/S Front, Aluminum End Panels & Interior)
Suffix SA (S/S Exterior, Aluminum Interior)
Suffix SS (S/S Exterior & Interior)

Models Available

- Half Door
- Remote
- Pass-Thru
- Shallow Depth
- Hinged Glass Doors

Optional Features & Accessories

- Stainless Steel Case Back
- Pan Slide Assemblies
- Increased Refrigeration Systems
- Stainless Steel Shelves
- Digital Thermometer
- Rehinging of Doors
- Legs

VALUE LINE

CHARACTERISTICS	1F One Section Reach-In	1F One Section Pass-Thru	2F Two Section Reach-In	2F Two Section Pass-Thru	3F Three Section Reach-In	3F Three Section Pass-Thru
DIMENSIONAL DATA						
Net Capacity (cu. ft.)	20	20	48	48	70	70
Width, Overall (in.)	26	26	52	52	78	78
Depth, Overall (Incl. Hdls.) (in.)	35 1/2	39	35 1/2	39	35 1/2	39
Depth (Less Door(s)) (in.)	32	32	32	32	32	32
Depth (Doors(s) Open 90°) (in.)	55 1/2	79	55 1/2	79	55 1/2	79
Clear Door Width (in.)	19 3/8	19 3/8	19 3/8	19 3/8	19 3/8	19 3/8
Clear Full-Door Height (in.)	58 5/8	58 5/8	58 5/8	58 5/8	58 5/8	58 5/8
Clear Half-Door Height (in.)	27 1/2	27 1/2	27 1/2	27 1/2	27 1/2	27 1/2
Height, Overall (Inc. 5" Casters)(in.)	82 1/4	82 1/4	82 1/4	85 3/4	85 3/4	85 3/4
No. of Full Door(s)	1	2	2	4	3	6
No. of Half Door(s)	2	4	4	8	6	12
No. of Shelves	3	3	6	6	9	9
Shelf Area (sq. ft.)	20.4	20.4	40.8	40.8	61.2	61.2
Tray Slide Capacity (Half)	11 ea.	11 ea.	11 ea.	11 ea.	11 ea.	11 ea.
Tray Slide Capacity (Full)	24 ea.	24 ea.	24 ea.	24 ea	24 ea	24 ea
REFRIGERATION DATA						
Condensing Unit Size (H.P.)	1/3	1/3	1/2	3/4	3/4	1
Capacity (BTU/Hr)*	1590	1590	2470	3575	3575	4325
ELECTRICAL DATA						
Cabinet Specifications	115/60/1	115/60/1	115/60/1	115/208-230/60/1	115/208-230/60/1	115/208-230/60/1
Feed Wires (Incl. Ground)	3	3	3	4	4	4
Condensing Unit Specs.	115/60/1	115/60/1	115/60/1	208-230/60/1	208-230/60/1	208-230/60/1
Total Amperes	7.6	8.0	9.8	9.0	9.3	12.1
Cabinet Amperes	1.6	1.9	1.9	2.6	2.9	3.9
Defrost Amperes	5.2	5.2	6.5	6.5	9.6	9.6
Power Supply Cord	yes	yes	yes	no	no	no
SHIPPING DATA						
Height – crated (in.)	85 1/2	85 1/2	85 1/2	85 1/2	85 1/2	85 1/2
Width – crated (in.)	31 5/8	31 5/8	64	64	90	90
Depth – crated (in.)	42	42	42	42	42	42
Volume – crated (cu.ft.)	65	65	133	133	187	187
Weight Std – crated (lbs.)	325	355	555	665	790	885
Weight SS – crated (lbs.)	385	415	635	745	905	1000
Weight Std – uncrated (lbs.)	225	225	385	495	580	675
Weight SS – uncrated (lbs.)	285	315	465	575	695	790

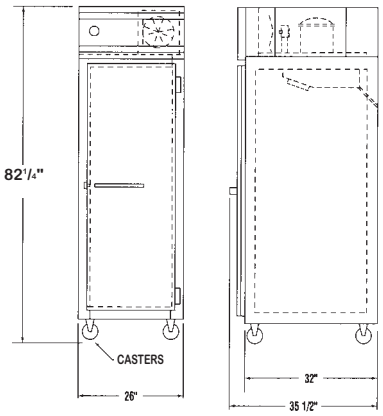

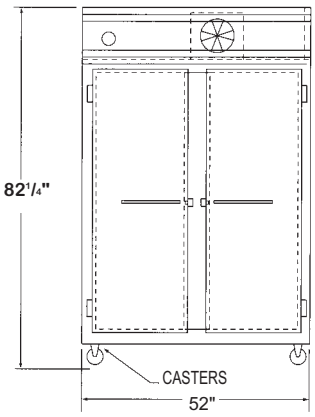

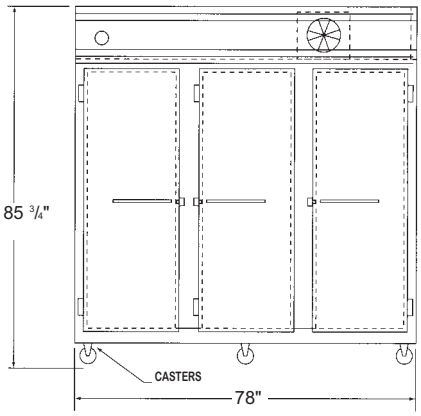

* Rating @ -15°F Evaporator, 90° Ambient

Note: All specifications subject to change without notice.

Note: If the cabinet is located directly against wall and/or under low ceiling, a minimum clearance of 2" is required.

Continental Refrigerator

A Division of National Refrigeration & A/C Products, Inc.
539 Dunksferry Road Bensalem, PA 19020
(800) 523-7138 Fax: (215) 244-9579
www.continentalrefrigerator.com