Continental

Refrigerator

REACH-IN REFRIGERATORS

Standard Features

- Modern, State-of-the-Art Styling
- Performance Rated Refrigeration System Utilizing Environmentally Safe R-134a Refrigerant
- 3" Non-CFC Polyurethane Foam Insulation
- Chrome Plated Flow Line Handles
- Cam-Action Lift-Off Hinges
- Self-Closing Doors
- Automatic Interior Lighting
- Magnetic Snap-In Door Gasket
- Cylinder Lock in Each Door
- Automatic Electric Condensate Evaporator
- 5" Casters
- Heavy-Duty, Epoxy-Coated Steel Shelves
- External Dial Thermometer

Standard (S/S Front, Aluminum End Panels & Interior)
Suffix SA (S/S Exterior, Aluminum Interior)
Suffix SS (S/S Exterior & Interior)

Optional Features & Accessories

- Stainless Steel Case Back
- Pan Slide Assemblies
- Increased Refrigeration Systems
- Stainless Steel Shelves
- Digital Thermometer
- Rehinging of Doors
- Legs
- Half Door
- Pass-Thru
- Remote
- Shallow Depth
- Hinged Glass Doors

Utilizing Environmentally Safe, CFC-free R-134a Refrigerant

REACH-IN REFRIGERATORS

SPECIFICATIONS	1R One Section		2R Two Section		3R Three Section	
CHARACTERISTICS	Reach-In	Pass-Thru	Reach-In	Pass-Thru	Reach-In	Pass-Thru
DIMENSIONAL DATA						
Net Capacity (cu. ft.)	20	20	48	48	70	70
Width, Overall (in.)	26	26	52	52	78	78
Depth, Overall (Incl. Hdls.) (in.)	35 1/2	39	35 1/2	39	35 1/2	39
Depth (Less Door(s)) (in.)	32	32	32	32	32	32
Depth (Doors(s) Open 90°) (in.)	55 1/2	79	55 1/2	79	55 1/2	79
Clear Door Width (in.)	19 3/8	19 3/8	19 3/8	19 3/8	19 3/8	19 3/8
Clear Full-Door Height (in.)	58 5/8	58 5/8	58 5/8	58 5/8	58 5/8	58 5/8
Clear Half-Door Height (in.)	27 1/2	27 1/2	27 1/2	27 1/2	27 1/2	27 1/2
Height, Overall (Inc. 5" Casters)(in.)	82 1/4	82 1/4	82 1/4	82 1/4	82 1/4	82 1/4
No. of Full Door(s)	1	2	2	4	3	6
No. of Half Door(s)	2	4	4	8	6	12
No. of Shelves	3	3	6	6	9	9
Shelf Area (sq. ft.)	20.4	20.4	40.8	40.8	61.2	61.2
Tray Slide Capacity (Half)	11 ea.	11 ea.	11 ea.	11 ea.	11 ea.	11 ea.
Tray Slide Capacity (Full)	24 ea.	24 ea.	24 ea.	24 ea	24 ea	24 ea
REFRIGERATION DATA						
Condensing Unit Size (H.P.)	1/4	1/4	1/3	1/3	1/2	1/2
Capacity (BTU/Hr)*	1940	1940	2560	2560	4010	4010
ELECTRICAL DATA						
Cabinet Specifications	115/60/1	115/60/1	115/60/1	115/60/1	115/60/1	115/60/1
Feed Wires (Incl. Ground)	3	3	3	3	3	3
Condensing Unit Specs.	115/60/1	115/60/1	115/60/1	115/60/1	115/60/1	115/60/1
Total Amperes	6.9	7.2	9.1	9.8	12.0	13.0
Cabinet Amperes	1.6	1.9	1.9	2.6	2.9	3.9
Defrost Amperes	-	-	-	-	-	-
Power Supply Cord	yes	yes	yes	yes	yes	yes
SHIPPING DATA						
Height – crated (in.)	85 1/2	85 1/2	85 1/2	85 1/2	85 1/2	85 1/2
Width – crated (in.)	31 5/8	31 5/8	64	64	90	90
Depth – crated (in.)	42	42	42	42	42	42
Volume – crated (cu.ft.)	65	65	133	133	187	187
Weight Std – crated (lbs.)	310	340	520	580	725	815
Weight SS – crated (lbs.)	370	400	600	660	840	930
Weight Std – uncrated (lbs.)	210	240	350	410	515	600
Weight SS – uncrated (lbs.)	270	300	430	490	630	720

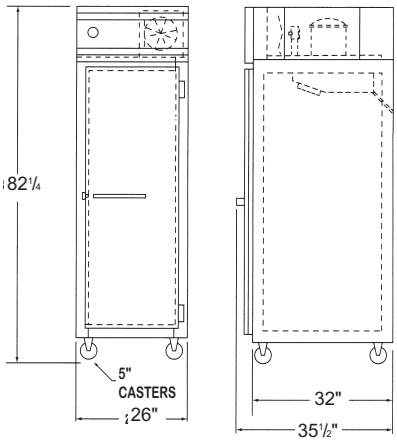

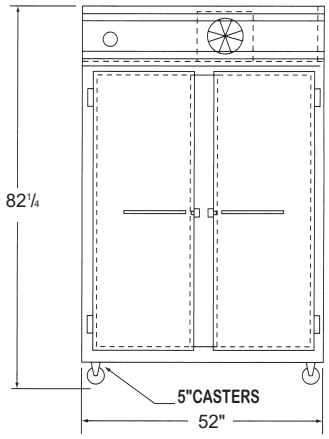

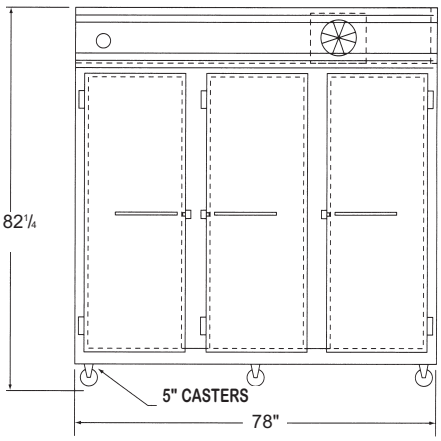

* Rating @ +25°F Evaporator, 90° Ambient

Note: All specifications subject to change without notice.
Note: If the cabinet is located directly against wall and/or under low ceiling, a minimum clearance of 2" is required.

Continental Refrigerator

A Division of National Refrigeration & A/C Products, Inc.
539 Dunksferry Road Bensalem, PA 19020
(800) 523-7138 Fax: (215) 244-9579
www.continentalrefrigerator.com