Model: FI-200W

Item # _____

Single Tank Conveyor

Clear ideas; brilliant results.

Standard Features

- Heavy duty stainless steel construction, Type 304
- Auto-fill
- Auto-start
- Two independent wash motor pumps
- Two speed motor
- **Built-in electric booster heater**
- Electric tank heater
- Low water tank heat protection
- Hi-limit thermostat
- Standard 20” x 20” racks
- Door safety switch
- Adjustable washing and rinsing thermostats
- Energy and Water saver design, only 119gal./hr.
- Top mounted controls
- Separate starter switches ensure wash and rinse are energized only when a rack is in place, reducing water and chemical consumption
- Single point electrical and plumbing connections
- Vacuum breaker
- Fully automatic wash and rinse cycle with correct temperature indicators for consistent cleaning
- Removable front electrical panel for easy access to controls
- Stainless steel non-clogging individual wash and rinse arms
- Wash tank with twin filter and tray system
- Adjustable legs
- Insulated door reduces noise and heat dissipation
- Large 46” door for better accesibility to components and cleanability
- Standard with:
  (1) CT-10 All purpose rack
  (1) CP-16/18 Peg rack

Direction of Operation

- ❑ FI-200W L/R-for Left to Right
- ❑ FI-200W R/L-for Right to Left

Options and Accessories

- ❑ CT-10 All purpose rack
- ❑ CU-20 Cutlery grid
- ❑ CP-16/18 Peg rack
- ❑ CB-7 Tray rack
- ❑ Cutlery container
- ❑ Table limit switch
- ❑ Vent hood kit w/curtain

Performance / Capacities

Capacities	
Racks per hour	150
Dishes per hour	3750
Glasses / cups per hour	5400
Wash Tank	15 gal. / 55 litre
Water Consumption / Requirements	
Gallons per hr. (Max. use)	119 gal. / 450 litre
Inlet temperature (Optimum)	140ºF / 60ºC
Flow rinse pressure	15 – 25 PSI
Wash Pump Motor	
Motor (hp)	2 x 1 h
Venting	
Load end (min. CFM)	200
Unoad end (min. CFM)	400

Temperatures	
Wash	160º F / 71º C
Rinse	190º F/ 88º C
Heating	
Electric wash tank heater	9 kw
Electric booster heater	36 kw
Dimensions / Shipping	
Width	50” / 1270 mm
Depth	37” / 940 mm
Height	78” / 1981 mm
Max. clearance for dishes / glasses	18” / 457 mm
Shipping weight	650lbs / 298 kg
Shipping volume (cu. ft.)	83

FAGOR

Fagor Commercial, Inc.
12800 N.W. 38th Avenue • Miami, Florida 33054
PH.: (305) 779-0170 • FAX: (305) 779-0173
Toll Free: 866-GO FAGOR (463-2467)

www.fagorcommercial.com

MONDRAGON CORPORACION COOPERATIVA

Model: FI-200W

Single Tank Conveyor

Specifications

Construction: The FI-200W is a fully automatic dishwasher completely constructed of high-quality stainless steel, type 304. Both upper and lower wash and rise arms are constructed of stainless steel to ensure a long life span. Extra wide stainless steel legs are adjustable up to 4” high.

Door: The door is constructed of stainless steel, type 304, counter-balanced and insulated to reduce noise and dissipation. Large access door aids machine cleanability.

Pump: Our exclusive two pump system each connected to a single wash arm (top and bottom), ensure high pressure re-circulating wash throughout the tank.

Controls: Controls are top mounted and accessible for service from the top. Two speed motor and stand-by mode for preparation of the machine.

Filling and heating system: The power-on switch automatically fills the tanks to the proper level. Wash and booster tank are heated at the same time earning efficiency in the stand by mode. Wash tank water temperature is maintained by a 9 kw element. **Built-in 36 kw electric booster heater**. Safety thermostats and a pressure switch protect heating elements in case of low water or fail.

Washing and rinsing: Separate starter switches ensure wash and rinse are energized only when a rack is in place, reducing water and chemical consuption. **Water consuption only 119 gal./hr**.

Drainage: Filter system with removable scrap basket, prevents waste from getting into the washing pumps.

Service Connections

A1– Water inlet – 3/4” Female hose connector on 5’ long flexible hose supplied with machine; Adaptor for 3/4” female garden hose fitting also supplied; 140ºF / 60ºC Optimum water temperature; 15-25 psi flow rinse pressure.

D1– Drain – 4’ long, 3/4” I.D. flexible hose; Maximum 10” drain height permitted; Indirect connection to drain pipe of 1 1/2” (minimum).

E – Electrical terminal block connection point – 208-240/60/3 - Use wire suitable for at least 194ºF / 90ºC.

P – Terminal block to correct table limit switch, detergent pump and rinse aid dispenser.

Electrical and Production Loads

Volts/Hz/Ph	Amps
208/60/3	112
220/60/3	119
240/60/3	129

*50 Hz models, consult factory

**Dishtables to be supplied by others. Max. 21 1/2” opening; Max. 10” height for flange under vent hood

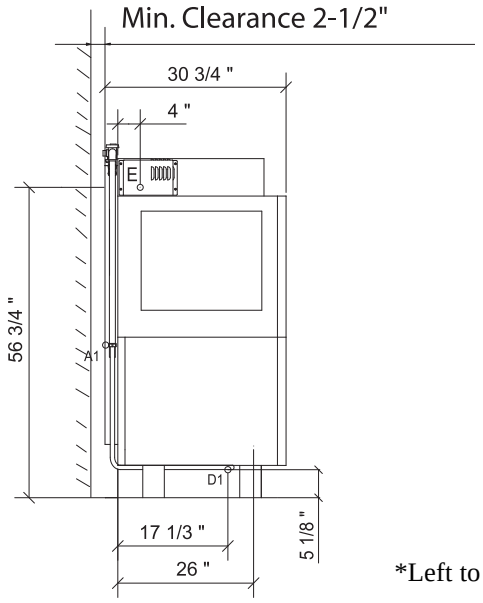

Side View

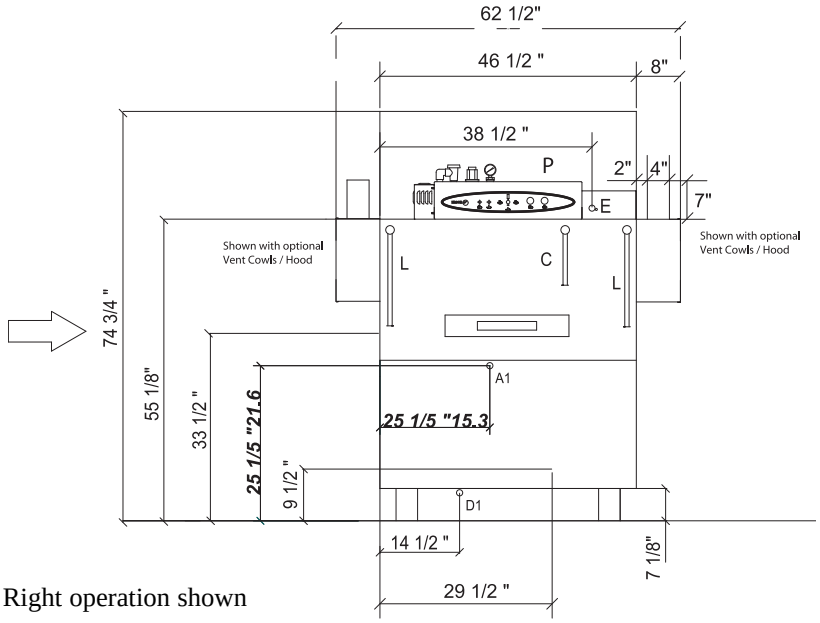

*Left to Right operation shown

Front View

Caution - Before connecting water to this unit, have water supply analyzed to make sure harness is not greater than 2.0 grains and pH level is within the range of 7.0-8.5. Water which fails to met these standards, should be treated by the installation of a water conditioner. EQUIPMENT FAILURE CAUSE BY INADEQUATE WATER QUALITY IS NOT COVERED UNDER WARRANTY.

Warning - Installation should be made by qualified personnel who will observe all specified local codes.

FAGOR

Fagor Commercial, Inc.
12800 N.W. 38th Avenue • Miami, Florida 33054
PH.: (305) 779-0170 • FAX: (305) 779-0173
866-GO FAGOR (463-2467)

www.fagorcommercial.com

The manufacturer reserves the rights to modify materials and specifications without notice.

Printed in the USA • 09/04