Project _____ Item # _____ Quantity _____

SP10
10 Quart Mixer

Model

❑ SP10 - 10 Quart Mixer

Built into each mixer is the quality of workmanship and design synonymous with Globe.

Standard Features

- Powerful 1/3 HP custom built motor
- Three fixed speeds
- Gear driven, high torque transmission
- Heat-treated hardened steel alloy gears and shafts
- Permanently lubricated transmission
- Thermal overload protection
- Rigid cast iron body
- Stainless steel bowl guard with built in ingredient chute
- NSF approved enamel gray paint
- Front mounted controls
- 15 minute timer
- Industry standard #12 attachment hub
- Safety interlocked bowl guard and bowl lift
- Non-slip rubber feet
- 6 foot cord and ground plug

Standard Accessories

- 10 quart stainless steel bowl
- Flat beater (aluminum)
- Stainless steel wire whip
- Spiral dough hook (aluminum)

Optional Attachments/Accessories

❑ Slicer/shredder/grater for #12 hub
❑ Meat grinder for #12 hub
❑ Flat beater (stainless steel)
❑ Spiral dough hook (stainless steel)
❑ Mixer table with undershelf

Standard Warranty

- 2 years parts and one year labor

Approved By:_____

Date:_____

precisely.

GLOBE FOOD EQUIPMENT COMPANY

www.globeslicers.com

2153 Dryden Rd.
Dayton, OH 45439
Phone: 937-299-5493
Phone: 800-347-5423
Fax: 937-299-4147

GLOBE FOOD EQUIPMENT COMPANY

10 Quart Mixer

SP10

10 Quart Mixer

SP10

Specifications

Motor: 1/3 HP, grease packed ball bearing, air cooled, 115/60/1, 8 amps. Thermal overload protection (automatic reset).

Finish: NSF approved enamel gray paint.

Capacity: 10 quart (9 liter) bowl.

Transmission: Fixed speed transmission is made of heat treated, hardened alloy, precision milled gears that operate the planetary action and provide high torque mixing power. The gears are packed in a long lasting grease, and all shafts are mounted in ball bearings.

Safety Interlocks: The bowl guard and bowl lift lever are interlocked. The mixer will automatically shut down when the guard is opened or the bowl is lowered.

Agitator Speeds (RPMs):

Low	104
Intermediate	194
High	353

Attachment Speeds (RPMs):

Low	59
Intermediate	110
High	201

Standard Equipment: Standard equipment includes a 10 quart #304 series stainless steel bowl, aluminum spiral dough hook, stainless steel wire whip, aluminum flat beater, stainless steel bowl guard with built in ingredient chute, 15 minute timer, and #12 attachment hub. A sturdy hand lever on the body column raises and lowers the bowl as well as locking in place at the top and bottom positions.

Cord: 6 ft. flexible three wire cord and ground plug.

Dimensions:
Foot Print = 14.6” x 15.7”
(37.1cm x 39.9cm)
Overall Length = 21.2” (53.8cm)
Overall Width = 16.1” (40.9cm)
Overall Height = 24.6” (62.5cm)

Shipping Information:
Freight Class: 85
Net Weight: 132 lbs. (60 kgs.)
Shipping Weight: 245 lbs.(111.1 kgs.)
Shipping Dimensions:
32”W x 40”D x 42”H
(81.3cm x 101.6cm x 106.7cm)
Cartons are affixed to a skid (pallet). The weight and dimensions of this skid are included above and may vary from shipment to shipment.

Optional Accessories:

XXBEAT-10SS	Stainless Steel Flat Beater
XXHOOK-10SS	Stainless Steel Spiral Dough Hook

XTABLE Mixer Table with Undershelf (stainless steel top with galvanized steel undershelf and legs)
30”W x 24”D x 24”H
(76.2cm x 61cm x 61cm)

Optional Attachments:
XMCA-SS Meat Grinder Assembly (Polished stainless steel cylinder, worm, ring, and pan. Includes knife, 3/16” plate, stainless steel pan, and pusher.)
Chopper Plate Sizes Available:

CP02-12	1/16”	(2mm)
CP04-12	5/32”	(4mm)
CP05-12	3/16”	(5mm)
CP06-12	1/4”	(6mm)
CP08-12	5/16”	(8mm)
CP10-12	3/8”	(10mm)
CP12-12	1/2”	(12mm)
CP14-12	9/16”	(14mm)
CP16-12	5/8”	(16mm)
CP18-12	11/16”	(18mm)
CP00-12	Stuffing Plate	

XST12 1/2” stuffing tube (sheep)
XST34 3/4” stuffing tube (hog)

XVSGH 9” Slicer/Shredder/Grater Housing Only *(no plates included- must select from plates below)*

XASP Adjustable slicing plate
XPH Plate holder - *only 1 required

Shredding/Grating Plates:

XSP332*	3/32”	(2.3mm)
XSP316*	3/16”	(4.7mm)
XSP14*	1/4”	(6.3mm)
XSP516*	5/16”	(7.9mm)
XSP12*	1/2”	(12.7mm)
XGP*	Grating plate	

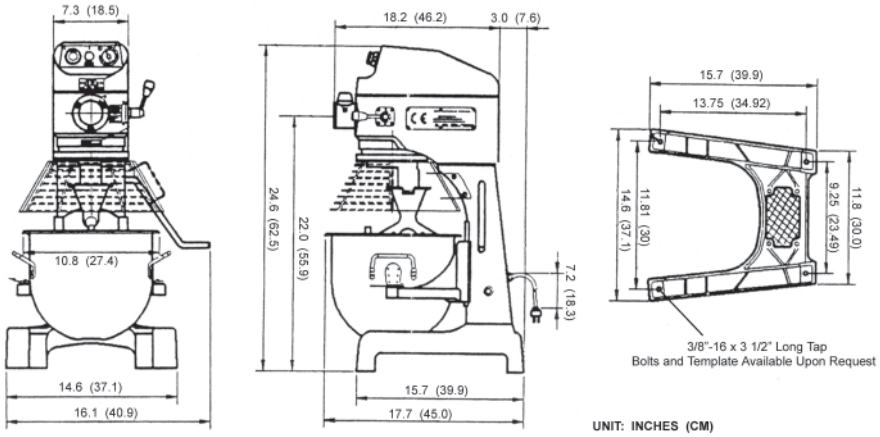

GLOBE FOOD EQUIPMENT COMPANY

www.globeslicers.com

2153 Dryden Rd.
Dayton, OH 45439
Phone: 937-299-5493
Phone: 800-347-5423
Fax: 937-299-4147

precisely.

Printed in U.S.A. 3-2008

Specifications are subject to change without notice.