Project #: _____

Item #: _____

AIA File #: _____

Specification #: _____

24" Restaurant Range Series

Model Numbers

❏ IR-4 ❏ IR-2-G12 ❏ IR-G24
❏ IR-4-XB ❏ IR-2-G12-XB ❏ IR-G24-XB

Model IR-4

Burner heads remove for easy cleaning.

Cooktop - Open Burner Features

- PyroCentric™ burner heads with two rings of flame for even cooking no matter the pan size.
- PyroCentric burners are 28,000 BTU/hr (8 KW) with a 7,000 BTU/hr. (2 KW) low simmer feature.
- Cast iron burners are anti-clogging and removable for easy cleaning.
- No gaskets or screws.
- Grates are in 12" x 12" (305 x 305) sections to easily lift off for cleaning.
- Anti-clogging shield designed in the grate protects the pilot from grease and debris.
- Pots slide easily from section to section.

Standard Oven Features

- Oven interior accommodates standard 18" x 26" (457 x 660) sheet pans front-to-back. Interior is 20" w x 26" d x 14" h (508 w x 660 d x 356 h).
- 100% safety pilot.
- Oven controls located on the side in cool zone.
- Manual oven shut-off valve.
- Heavy duty thermostat with temperature range from 150ºF to 500ºF. (65ºC to 260ºC).
- Porcelainized side, rear, deck and door lining.
- Unique baffle above the burner distributes heat flow to provide even cooking temperatures throughout the 27,000 BTU/hr. (8 KW) oven.
- Stamped inner door liner provides extra strength while optimizing heat retention.

All measurements in ( ) are metric equivalents.

Restaurant Range Features

- Stainless steel front, sides, backguard, shelf, landing ledge and kick plate.
- Welded stainless steel seams.
- Large 5" (127) stainless steel landing ledge.
- 6" (152) heavy duty legs with adjustable feet.
- One year parts and labor warranty.
- AGA and CGA design certified, NSF and CE listed.

Imperial Commercial Cooking Equipment

1128 Sherborn Street ■ Corona, CA 92879 ■ 800.343.7790 ■ Ph: 951.281.1830 ■ Fx: 951.281.1879

www.imperialrange.com ■ E-mail: imperialsales@imperialrange.com

Imperial 24"(610) Restaurant Range Series

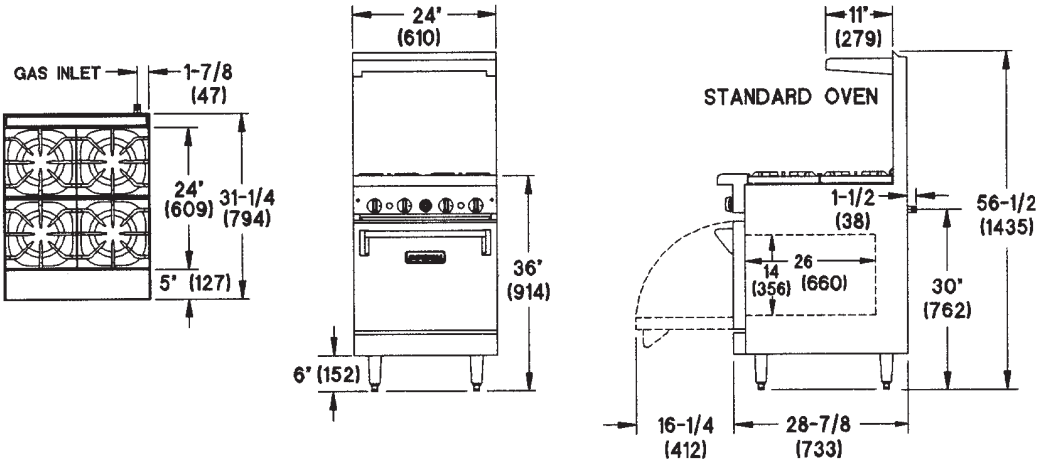

Model#	Description	Total BTU	Total (KW)	Ship Weight (Kg.)	Lbs.
IR-4	4 Open Burners, 1 Standard Oven	139,000	(41)	(210)	465
IR-4-XB	4 Open Burners, 1 Cabinet Base	112,000	(33)	(183)	405
IR-2-G12	12" (305) Griddle, 2 Open Burners, 1 Standard Oven	103,000	(30)	(213)	470
IR-2-G12-XB	12" (305) Griddle, 2 Open Burners, 1 Cabinet Base	76,000	(22)	(185)	410
IR-G24	24" (610) Griddle, 1 Standard Oven	67,000	(20)	(224)	495
IR-G24-XB	24" (610) Griddle, 1 Cabinet Base	40,000	(12)	(196)	435

Range Dimensions: 24" (914) w x 37 1/2"(953) d x 36" (914) h. Height to cooking surface.

Crated Dimensions: 26 1/2" (673) w x 39" (991) d x 35" (889) h. All measurements in ( ) are metric equivalents.

Standard Exterior Specifications
Front, sides, landing ledge, control panel, backguard with shelf and kick plate shall be constructed of stainless steel with welded and finished stainless steel seams. Control knobs shall be constructed of durable cast metal, polished chrome finish. Chrome plated 6" (152) legs shall have adjustable feet.

Cooktop Specifications
Open burners shall be 28,000 BTU/hr. (8 KW) lift-off PyroCentric™ burner heads with no gaskets, no screws. Each burner shall have one standing pilot. Drip tray shall be one piece and removable. Top grates shall be constructed in 12" x 12" (305 x 305) lift-off sections of heavy-duty cast iron. A cast-in bowl shall direct heat upward. Top grate design shall include an integrated pilot shield. Griddle tops shall have a highly polished 3/4" (19) plate with 3" (76) wide stainless steel grease though and be located on the left side of the range top. A 20,000 BTU/hr. (6 KW) burner shall be located every 12" (305) of griddle surface. Manual controls shall be standard, thermostatic controls optional.

Standard Oven Specifications
Oven shall be 12 gauge construction with a welded front frame. Oven shall be fully insulated with non-sag fiberglass. Oven interior shall have porcelainized sides, rear, deck and door lining. Oven burner shall provide 27,000 BTU/hr. (8 KW). Unique baffle above the burner shall distribute heat flow to provide even cooking temperatures throughout the oven. Oven shall have a 100% safety pilot. One heavy duty locking chrome plated rack shall be included. Thermostat shall be adjustable from 150ºF to 500ºF (65ºC to 260ºC). Oven interior dimensions shall be 20" w x 26" d x 14" h (508 x 660 x 356).

Gas: Manifold pressure is 5.0" W.C. for natural gas or 10.0" for propane gas. Manifold size 3/4" (19) NPT. 3/4" (19) pressure regulator supplied with equipment to be installed at time of connection. Specify type of gas and elevation if over 2000 ft. (610 m).

Clearance: For use only on non-combustible floors. Legs or casters are required for non-combustible floors; or 2" (51) overhang is required when curb mounted. Provide 0" clearance from non-combustible surfaces and 8" (203) from combustible surfaces.

Optional Items:
- Extra chrome rack
- Reinforcement channels for mounting cheesemelter and salamander
- 10" (254) stainless steel wok ring
- Saute burner head
- Wok burner head
- Extra oven racks
- Thermostatic griddle control (specify griddle size)
- Grooved griddle top
- Chrome griddle top
- Griddle safety valve
- Gas shut off valve 3/4" (19)
- Quick disconnect and flexible gas hose
- 6" (152) casters

Specification #: _____

AIA File #: _____

Imperial Commercial Cooking Equipment
1128 Sherborn Street ■ Corona, CA 92879 ■ 800.343.7790 ■ Ph: 951.281.1830 ■ Fx: 951.281.1879
www.imperialrange.com ■ E-mail: imperialsales@imperialrange.com

 © 2007 Imperial Commercial Cooking Equipment All specifications subject to change without notice. Printed in the U.S.A.