ITEM # _____

TITAN CHICKEN BROILER HIGH PRODUCTION

JADE TITAN™

# CHICKEN BROILER HIGH PRODUCTION

*JCBH-48*

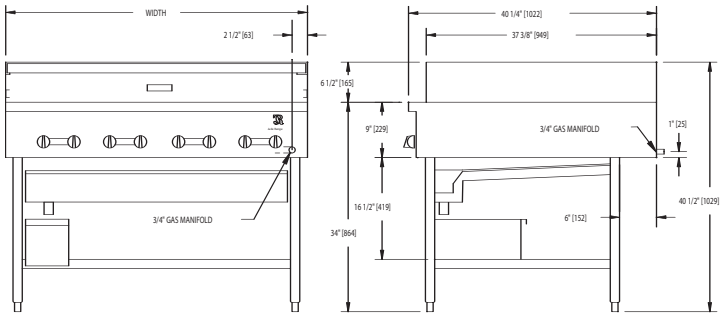


| MODEL | BURNERS | WIDTH | DEPTH | HEIGHT | BTUS |
|---|---|---|---|---|---|
| JCBH-24 | 4 | 24" | 40-1/4" | 40-1/2" | 100,000 |
| JCBH-30 | 5 | 30" | 40-1/4" | 40-1/2" | 125,000 |
| JCBH-36 | 6 | 36" | 40-1/4" | 40-1/2" | 150,000 |
| JCBH-42 | 7 | 42" | 40-1/4" | 40-1/2" | 175,000 |
| JCBH-48 | 8 | 48" | 40-1/4" | 40-1/2" | 200,000 |
| JCBH-60 | 10 | 60" | 40-1/4" | 40-1/2" | 250,000 |
| JCBH-72 | 12 | 72" | 40-1/4" | 40-1/2" | 300,000 |

| MODEL NO. | DESCRIPTION |
|---|---|
| ❑ JCBH-24 | 24" HIGH PRODUCTION CHICKEN BROILER |
| ❑ JCBH-30 | 30" HIGH PRODUCTION CHICKEN BROILER |
| ❑ JCBH-36 | 36" HIGH PRODUCTION CHICKEN BROILER |
| ❑ JCBH-42 | 42" HIGH PRODUCTION CHICKEN BROILER |
| ❑ JCBH-48 | 48" HIGH PRODUCTION CHICKEN BROILER |
| ❑ JCBH-60 | 60" HIGH PRODUCTION CHICKEN BROILER |
| ❑ JCBH-72 | 72" HIGH PRODUCTION CHICKEN BROILER |

## STANDARD FEATURES

- 14 gauge all welded body construction
- Precision individual control of burners
- One burner for every 6" of broiler width
- #304 stainless steel superstructure (removable for cleaning) offers 4 levels of broiling and gives an additional 4" of cooking space at the back
- High production burner output is 25,000 BTU/hr. each—actual broiling area available from 6.2 sq. ft. to 18.6 sq. ft.
- Specially designed flame control grates
- Extra large self-draining gutter, grease drawer and shelf
- 12 gauge all welded firebox construction
- 3/4" gas regulator
- Stainless steel front and sides

## AVAILABLE OPTIONS

❑ #304 stainless steel drip deflector and grease drawer
❑ #304 stainless steel legs and bottom shelf

## ACCESSORIES

❑ 4" casters, front two locking (3" diameter wheel)
❑ 36" flex hose with quick disconnect and restraining device
❑ 48" flex hose with quick disconnect and restraining device

**NOTE: SPECIFY TYPE OF GAS WHEN ORDERING.**

## UTILITY INFORMATION:

- 3/4" connection (see drawing for location)

- Required operating pressure:
  Natural Gas 5" W.C. minimum
  Propane Gas 10" W.C. minimum
  14" W.C. maximum

**Note:** This unit must be connected with the gas appliance regulator supplied.

**SPECIFY TYPE OF GAS WHEN ORDERING.**

**SPECIFY ALTITUDE WHEN ABOVE 2,000 FT.**

DESIGN CERTIFIED NSF

WWW.JADERANGE.COM

A HIGHER DEGREE OF PERFORMANCE™

JADE PRODUCTS COMPANY • 2650 Orbiter Street • Brea, CA 92821 • PHONE: 800-884-5233 FAX: 714-961-2550

Note: In line with their policy to continually improve products, Jade reserves the right to change materials and specifications without notice. PRINTED IN USA