QM30 Series
Ice Cube Machine

QM30 Series

- Compact size. Produces up to 65 lbs. (30 kgs.) of ice every 24 hours with a storage capacity of 30 lbs. (14 kgs.) Ideal for any small-volume ice need
- Attractive stainless steel cabinet – euro-design
- Easy access door, slides up & out of the way
- Patented cleaning and sanitizing technology
- Easy access air filter
- Front air intake and exhaust
- CFC-FREE R-134A refrigerant
- Manitowoc proven vertical evaporator
- Computerized control
- 3-year parts-and-labor warranty

America's #1 Selling Ice Machine

Ice Cube & Flake Machines • Ice Storage Bins • Ice Dispensers

Manitowoc Foodservice Group

Manitowoc QM30 Series

Model	Ice Shape	Ice production 24 hours lbs.	Ice production 24 hours kgs.	Power kWh/100 lbs. @90°/70°
QM30A	dice	49	22	20.4
Water usage/100 lbs./45.4 kgs. of Ice				
Potable Water: 38.4 gallons, 146 liters				

"A" following model number indicates "Air" cooled condensing unit.

Certified in Accordance with ARI Ice Storage Bins Certification Program, which is based on ARI Standard 820

Ice Machine Electric

115/60/1. (230/50/1 also available.) 115/60/1 ice machines are factory pre-wired with a 6' (180 cm) power cord and NEMA 5-15P-plug configuration.

Total Amps: 5.3 amps.

Maximum fuse size: 15 amps.

HACR-type circuit breakers can be used in place of fuses.

Specifications

BTU Per Hour:
1,600 (average) 2,350 (peak)

Compressor:
Nominal rating: 1/4 HP

Operating Limits:
- Ambient Temperature Range: 50˚ to 113˚F (10˚ to 45˚C
- Water Temperature Range: 50˚ to 104˚F (10˚ to 40˚C)
- Water Pressure Ice Maker Water In:
  Min. 34 psi (240 kPA)
  Max. 90 psi (620 kPA)

Legs:
Adjustable from 6.00"-7.25" (15.24-17.78 cm).

Ice Storage:
One piece bin liner (seamless) "rotocast" polyethylene.

Insulation:
Insulation foamed-in-place with CFC-FREE foam.

ISO 9001: 2000 Quality System Certified

Air Flow Front View

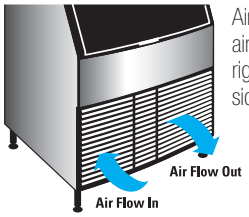

Air in left, air out right, no side vents.

Air Filter

Slides out from left side front without tools, easy to clean, reusable filter protects condenser from lint, grease and dust.

Cube Size

Dice
7/8" x 7/8" x 7/8"
(2.22 x 2.22 x 2.22 cm)

Front Access

Initiate ice, off and clean operations with simple upfront selector switch. No need to remove front panel.

24-HOUR PRODUCTION † lbs. kgs. AIR-COOLED UNIT			
air temp	water temp		
˚F	50˚	70˚	90˚
˚C	10˚	21˚	32˚
70˚	65	60	
21˚	30	28	
80˚	60	56	50
27˚	28	25	23
90˚	55	52	47
32˚	25	24	21

†Production for Dice cubes.

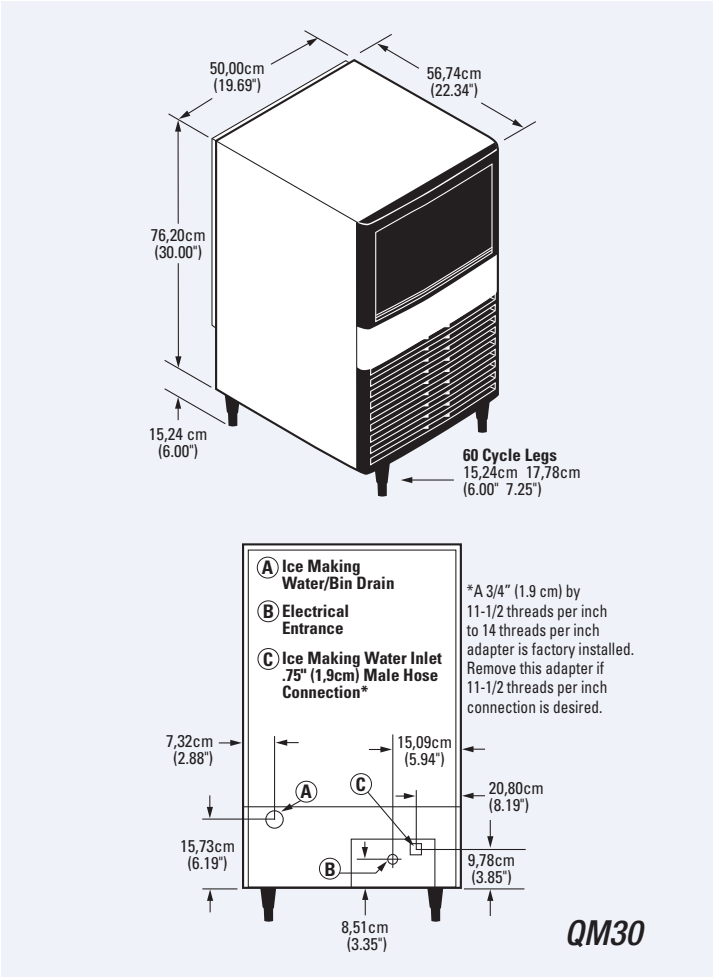

Installation Note - There is no minimum clearance required, however recommended clearance for top, sides, and back is 5" (12.7 cm).

Look for the EnergyMizer™ mark and you'll know you're getting the most from every energy dollar spent on foodservice equipment. ***www.energymizer.com***

Mixed Sources
Product group from well-managed forests, controlled sources and recycled wood or fiber
www.fsc.org Cert no. SW-COC-1886
© 1996 Forest Stewardship Council

We are committed to protecting the environment and its resources. For up-to-date product data always view an electronic version on our web site.

MANITOWOC ICE, INC.
2110 South 26th Street, P.O. Box 1720
Manitowoc, WI 54221-1720, USA
Ph: 920-682-0161 • Fax: 920-683-7589
Visit us online at www.manitowocice.com

3019B ©2008 Manitowoc 4/08 Continuing product improvement may necessitate change of specifications without notice.