Q-Model Series 130 Ice Cube Machine

Q-Model Series 130

- Up to 147* lbs. (67 kgs.) daily ice production
  **Production rating outside the scope of ARI Standard 820.*
- Only 26" (66.04 cm) wide, 26.50" (67.31 cm) deep, and 38.50" (82.55 cm) high on 6" (15.24 cm) legs
- 80 lbs. (36.6 kgs.) ice storage capacity
- Slide up and in bin door tucks under ice machine top cover. Patented ice damper maximizes ice storage capacity
- Stainless steel exterior with the fit and finish of an appliance
- Patented cleaning and sanitizing technology
- R-404A CFC-free refrigerant
- Warranty

  5-year parts and 5-year labor coverage on ice machine evaporator

  5-year parts and 3-year labor coverage on ice machine compressor

  3-year parts-and-labor coverage on all other components

ISO 9001:2000 Quality System Certified

America's #1 Selling Ice Machine

Ice Cube & Flake Machines • Ice Storage Bins • Ice Dispensers

Manitowoc Foodservice Group

Manitowoc Q-Model 130 Series

Model	Cube size	Ice production 24 hours lbs.	Ice production 24 hours kgs.	Power kWh/100 lbs.
QD-0132A	dice	90	41	16.0
QD-0133W	dice	123	56	9.8
QY-0134A	half-dice	90	41	16.0
QY-0135W	half-dice	123	56	9.8
Water usage/100 lbs./45.4 kgs. of Ice				
Potable Water: 38.4 gallons, 146 liters • Water-cooled Condenser: 187 gallons, 708 liters				

"A" or "W" following model number indicates "Air" or "Water" condensing unit.

Certified in Accordance with ARI Ice Storage Bins Certification Program, which is based on ARI Standard 820

24-HOUR PRODUCTION † (lbs. kgs.)							
AIR-COOLED UNIT				WATER-COOLED UNIT			
air temp	water temp			air temp	water temp		
°F	50°	70°	90°	°F	50°	70°	90°
°C	10°	21°	32°	°C	10°	21°	32°
70°	130	110	95	70°	147	127	108
21°	59	50	43	21°	67	58	49
80°	120	105	90	80°	144	126	106
27°	54	48	41	27°	65	57	48
90°	105	90	80	90°	140	123	103
32°	48	41	36	32°	63	56	47

†Production for Dice and Half Dice cubes.

Ice Machine Electric

115/60/1. (208-230/60/1 and 230/50/1 also available, consult factory.) 115/60/1 ice machines are factory pre-wired with a 6' (180 cm) power cord and NEMA 5-15P-plug configuration. 208-230/60/1 ice machines are factory pre-wired with a 6' (180 cm) power cord only, no plug is supplied.

Total Amps:

115/60/1		208-230/60/1	
Air-cooled:	7.6 amps	Air-cooled:	3.3 amps
Water-cooled:	6.8 amps	Water-cooled:	2.8 amps

Maximum fuse size:
Air and Water-cooled: 15 amps

HACR-type circuit breakers can be used in place of fuses.

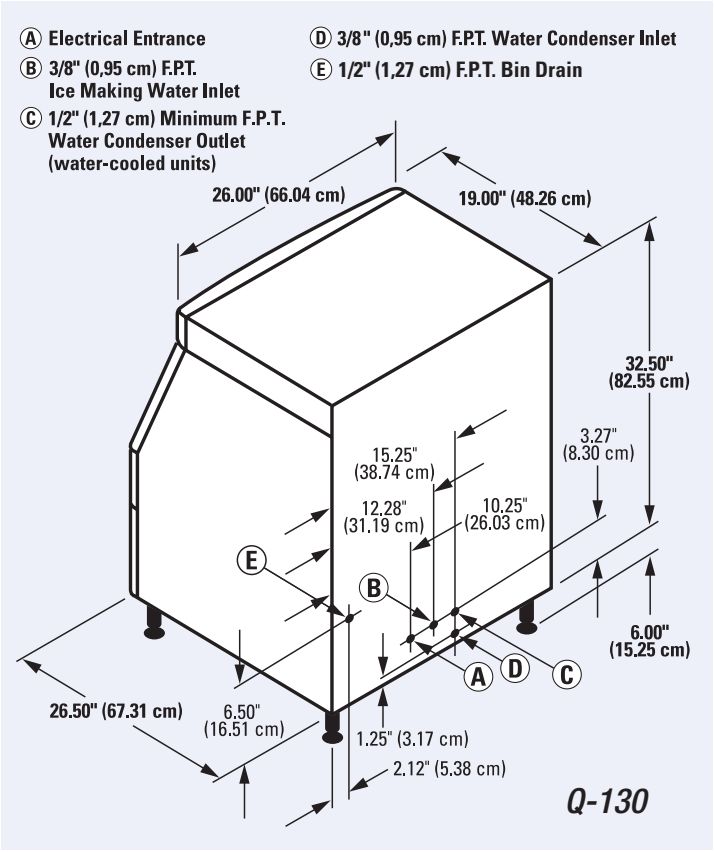

2734B ©2006 Manitowoc 4/06 Continuing product improvement may necessitate change of specifications without notice.

Installation Note - Recommended clearance for top, sides, and back is 5" (12.7 cm) however, there is no minimum clearance required.

Specifications

BTU Per Hour:
2,100 (average) 3,300 (peak)

Compressor:
Nominal rating: 1/3 HP

Cupra-Nickel Condenser:
(Water-cooled models)
Adds protection from corrosive water elements.

Operating Limits:
- Ambient Temperature Range: 40° to 110°F (4.4° to 43.3°C)
- Water Temperature Range: 40° to 90°F (4.4° to 32.2°C)
- Water Pressure Ice Maker Water In: Min. 20 psi (137.9 kPa) Max. 80 psi (551.1 kPa)
- Condenser Inlet Water In: (Water-cooled only) Min. 20 psi (137.9 kPa) Max. 150 psi (1,034.2 kPa)

Air Flow Front View

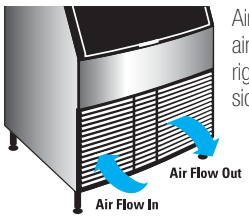

Air in left, air out right, no side vents.

Air Filter

Slides out from left side front without tools, easy to clean, reusable filter protects condenser from lint, grease and dust.

2 Cube Sizes Available

Half Dice
3/8" x 1 1/8" x 7/8"
(.95 x 2.86 x 2.22 cm)

Dice
7/8" x 7/8" x 7/8"
(2.22 x 2.22 x 2.22 cm)

Front Access

Initiate ice, off and clean operations with simple upfront selector switch. No need to remove front panel.

Manitowoc

MANITOWOC ICE, INC.
2110 South 26th Street, P.O. Box 1720
Manitowoc, WI 54221-1720, USA
Ph: 920-682-0161 • Fax: 920-683-7589
Visit us online at www.manitowocice.com