DV 80.2

HOT WATER SANITIZING DOOR-TYPE DISH MACHINE

Meiko's DV 80.2 introduces state of the art dishwashing technology with standard features and benefits currently unavailable in the door-type dishmachine market. Increased rack capacity and low water consumption not only reduce operating costs for the end user, but also provide enhanced performance and cycle flexibility. Meiko's exclusive, award-winning "Mike 2" programmable controller simplifies operation and service diagnostics.

Other unique features include Meiko's "Active Plus" wash tank soil removal system, "Soft Start" fine china and glassware protection system, "Aqua-Stop" water leakage protection system, and the "Auto Safe" temperature control system. Together with the unit's **internal booster heater** and **power rinse pump**, "Auto Safe" provides constant, *guaranteed* temperature and pressure for the wash and final rinse cycles.

As with all products synonymous with the name "Meiko," engineering excellence, manufacturing quality and performance come to the forefront in the DV 80.2.

Special Features:

- **Mike 2 Programmable Controller** - advanced micro-computer technology for service diagnostics and end-user dishmachine settings
- **Built-in Booster Heater with Power Rinse Pump** - Guarantees constant pressure and temperature during final rinse
- **Double-wall construction** keeps heat inside the machine, reducing energy consumption and heat loss into the dishroom environment
- **Active Plus** - Double filtration of wash water removes food soil, improving washing efficiency and saving detergent while easing cleaning chores
- **Auto Safe** - Guarantees minimum required wash and rinse temperatures regardless of incoming water temperature
- **Soft Start Wash Pump** - Protects dishes and glasses from chipping or breaking
- **Aqua-Stop** - Automatically turns off incoming water supply should internal water leakage occur

Standard Features:

- Three variable programmed time cycles - 66, 90 and 210 seconds
- Maximum rack capacity of 54 racks per hour
- Utilizes only 1.13 gallons of rinse water per rack
- Fully automatic operation - automatic fill, automatic start, and automatic reset
- Pumped drain for both floor and wall drain applications
- Self cleaning cycle - automatic cleaning of the wash chamber following machine shutdown
- Stainless steel non-clogging wash and rinse arms
- Sloped ceiling is safer for the user and prevents dripping of soiled water onto sanitized ware
- Front mounted controls with digital cycle and temperature displays
- 1 Hp wash pump
- All 304 and 316L stainless steel construction for advanced corrosion resistance
- Type A air gap system eliminates need for vacuum breaker
- Field-convertible for use in either straight-through or corner applications

Meiko • 917 Airpark Center Drive • Nashville, TN 37217 • (800) 55-MEIKO • FAX (615) 399-6620 • *www.meiko.us*

Dimensions

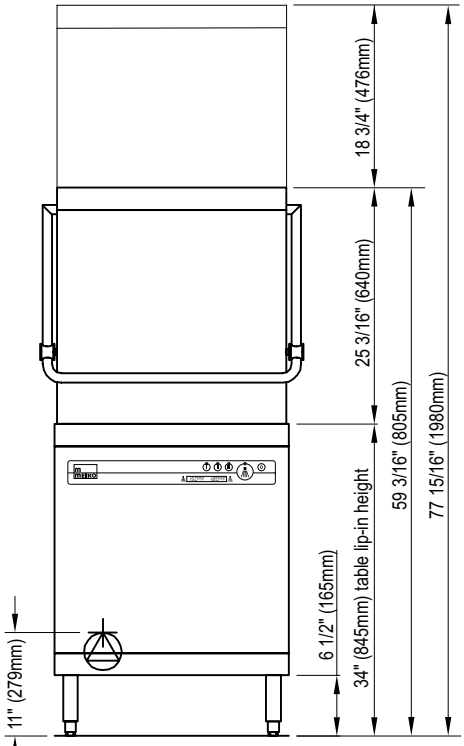

Front Elevation

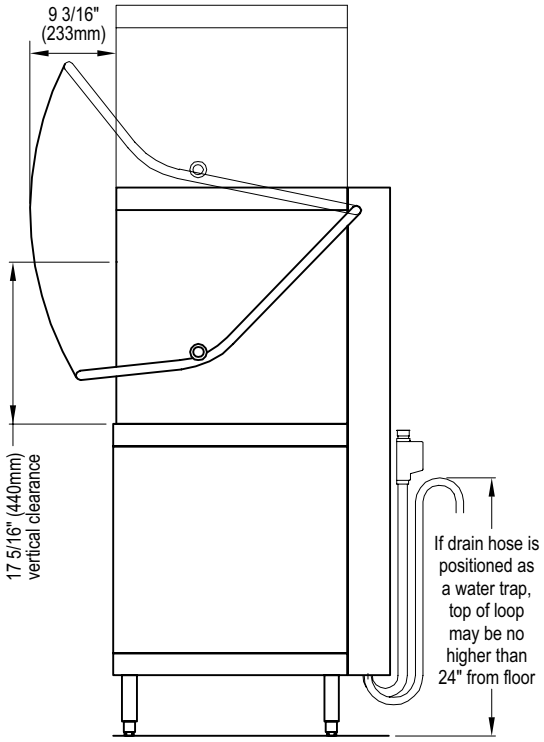

Side Elevation

Legend

Electrical terminal block

Strain relief provided at lower rear of machine. Adequate slack in the wiring should be provided to allow the machine to be moved for servicing.

H Fresh water connection

3/4" male garden hose supply connection is required. Supplied hose extends 4' 7" from machine connection.

D Drain connection

Requires indirect connection to 1-1/2" drain pipe (wall or floor). Supplied hose extends 4' 7" from machine connection.

Plan View

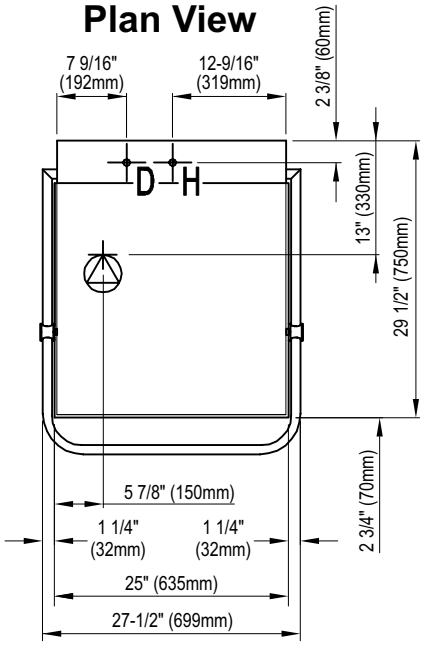

Rack Clearances and Table Positioning

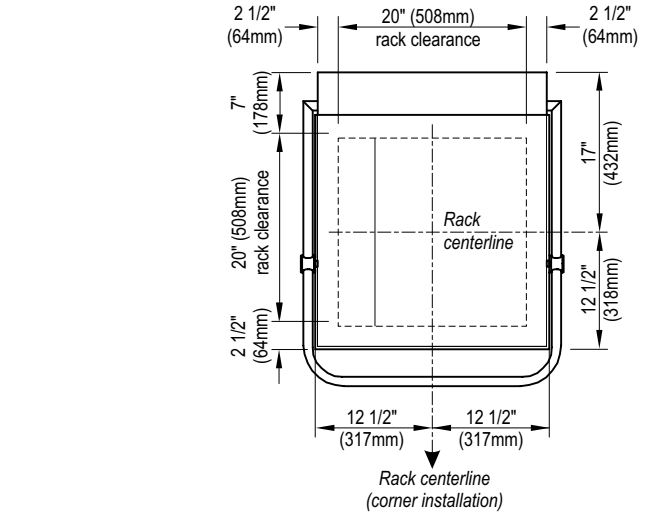

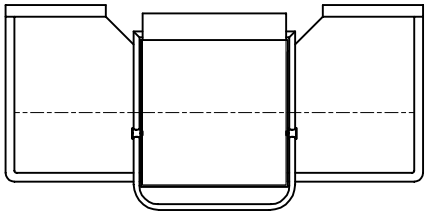

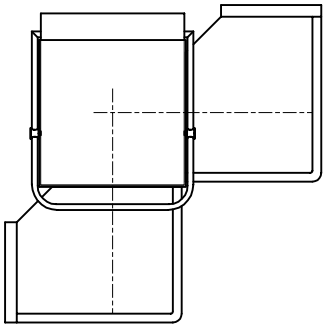

Meiko • 917 Airpark Center Drive • Nashville, TN 37217 • (800) 55-MEIKO • FAX (615) 399-6620 • *www.meiko.us*

Corner Installations

The DV 80.2 is field-convertible from straight-through to corner application in minutes, without additional parts.

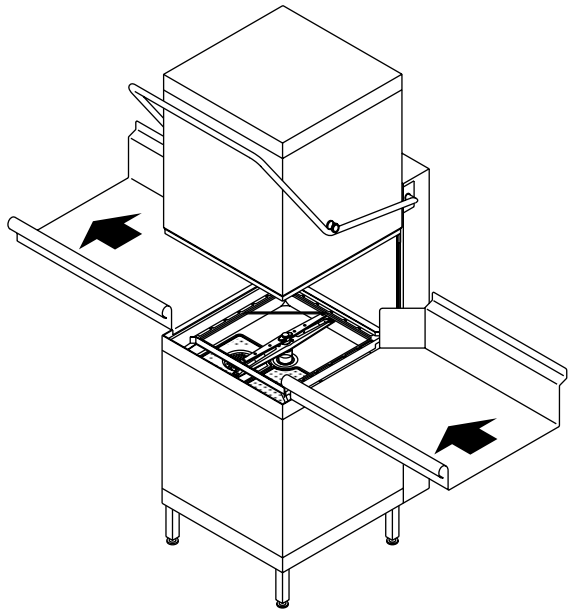

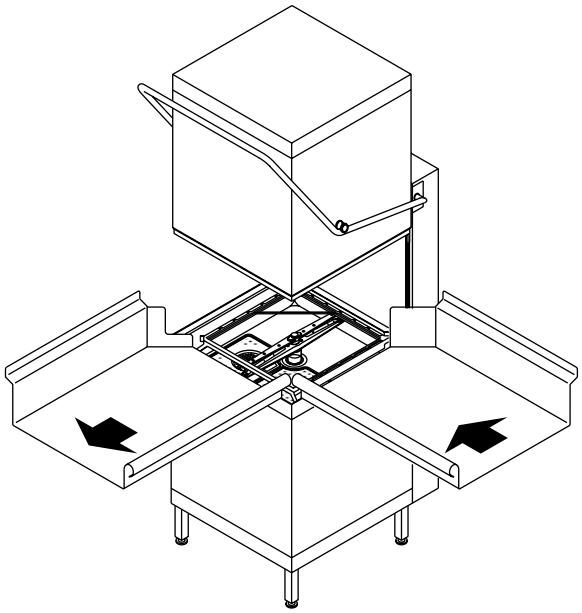

Recommended Tabling Construction

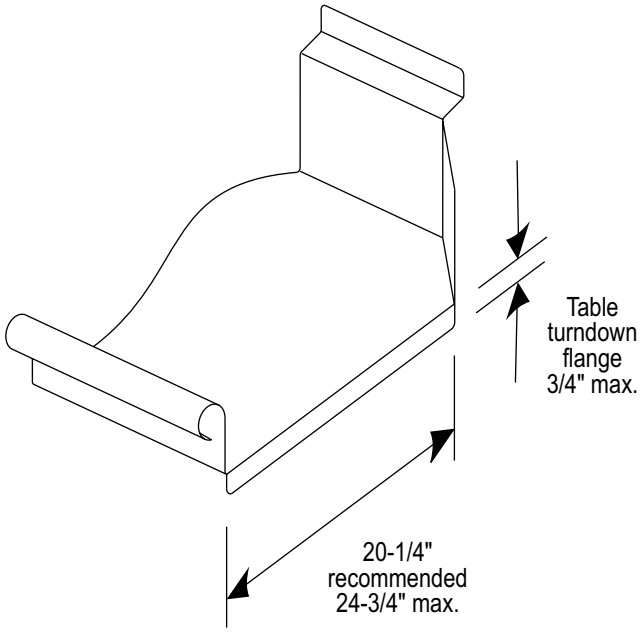

Tabling Cutout for Corner Installations

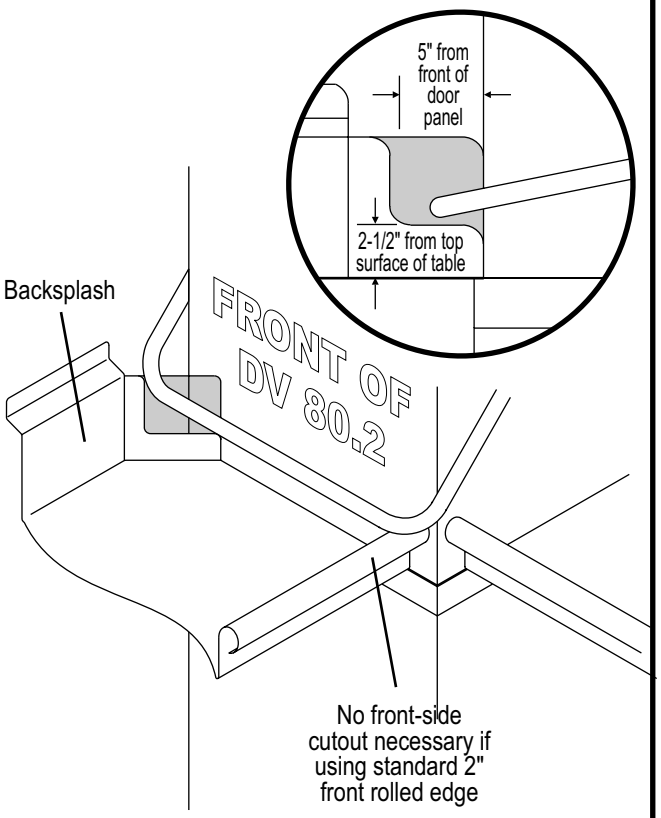

Technical Specifications

Optimum Capacity:
- Racks per hour 54
- Dishes per hour 1350
- Glasses per hour 1944

Optimum Cycle Time (Seconds):
- Wash Cycle 41
- Dwell / Drain Time 15
- Rinse Cycle 10
- Total Cycle 66

Water Requirements:
- Gallons per Rack 1.13
- Gallons per Hour 61.0
- Flow Pressure (psi) 8.7-72.5
- Incoming Waterline ..... 3/4” Male Garden Hose
- Drain line Size ..... 3/4” OD Flexible Hose

Required Operating Temperatures:
- Incoming Water (Optimum) ..... 140°F
- Wash (Minimum) ..... 150°F
- Rinse (Minimum) ..... 180°F

Tank Capacities:
- Wash Tank ..... 5.81 Gallons
- Booster Heater ..... 2.77 Gallons

Electrical Requirements:
- Wash Tank Heat ..... 2 x 2 kW
- Booster Heater ..... 9 kW
- Wash Pump ..... 1 HP
- Approximate Total Load Amps:
  - 208-230/60/1 ..... 60.0 A @ 208V, 67.0 A @ 230V
  - 208-230/60/3 ..... 42.7 A @ 208V, 48.2 A @ 230V
  - 460/60/3 ..... 24.0 A @ 460V

Dimensions:
- Overall (HxWxD) ..... 58-7/16” x 25” x 29-7/8”
- Inside Clearance Height ..... 17-5/16”
- Wall Clearance ..... 0” min.

Machine / Shipping Details:
- Machine Weight ..... 254 lbs.
- Shipping Weight ..... 296 lbs.
- Shipping Size (HxWxD) ..... 65” x 29-5/8” x 35-1/2”

Specification

DV 80.2 Item Number _____

Dishmachine shall be an NSF and UL-approved Meiko DV 80.2 hot water sanitizing door type dishmachine.

Unit shall be : ___ 208-230 V / 60 Hz / 1 Ph
___ 208-230 V / 60Hz / 3 Ph
___ 460 V / 60 Hz / 3 Ph

Unit shall have front mounted microcomputer controls, a 66 second total time cycle, and utilize 1.13 gallons fresh rinse water per cycle. Dishmachine shall utilize a fresh water pumped rinse for constant rinse pressure and temperature every cycle. Unit shall have integral wash tank soil removal system to maintain clean wash water and have built-in temperature safeguards to guarantee washing and rinsing at minimum required temperatures. Wash pump shall be equipped with a smooth start feature to eliminate chipped and broken dishware. Unit shall also incorporate features to stop operation and shut off water flow to the machine should leakage occur. Machine shall have variable time cycles for heavier than normal soil loads.

“Auto Safe” Feature

The DV 80.2 guarantees that the minimum NSF temperature requirements of 150°F during the wash and 180°F during the final rinse are achieved regardless of the incoming water temperature, even if the dishmachine is installed to a cold water line. Exact rack capacity is dependent upon the incoming water temperature and on the electrical supply voltage.

	@230 and 460V			@208V		
Incoming Temp.	140°F	110°F	70°F	140°F	110°F	70°F
Racks per Hour	54.5	36.0	25.2	46.8	30.8	21.3
Dishes per Hour	1363	900	630	1170	770	533
Glasses per Hour	1962	1296	907	1685	1109	767

Note: All specifications are subject to change without notice based on Meiko’s dedicated product improvement program.

Meiko • 917 Airpark Center Drive • Nashville, TN 37217 • (800) 55-MEIKO • FAX (615) 399-6620 • *www.meiko.us*