# FV 40.2

## HOT WATER SANITIZING UNDERCOUNTER DISH MACHINE

The new Meiko FV 40.2 introduces state of the art dishwashing technology with standard features and benefits currently unavailable in the undercounter market. Increased rack capacity and low water consumption not only reduce operating costs for the end user, but also provide enhanced performance and cycle flexibility. Meiko's exclusive "Mike 2" programmable controller simplifies operation and service diagnostics. Other unique features include our "Active Plus" wash tank soil removal system, "Soft Start" fine china and glassware protection system, "Aqua-Stop" water leakage protection system, and the "Auto Safe" temperature control system. Together with the unit's internal booster heater and power rinse pump, "Auto Safe" provides constant, *guaranteed* temperature and pressure for the wash and final rinse cycles. As with all products synonymous with the name "Meiko," engineering excellence, manufacturing quality and performance come to the forefront in the FV 40.2.

## Special Features:

- **Mike 2 Programmable Controller** - advanced micro-computer technology for service diagnostics and end-user dishmachine settings
- **Active Plus** - Double filtration of wash water removes food soil, improving washing efficiency and saving detergent while easing cleaning chores
- **Auto Safe** - Guarantees minimum required wash and rinse temperatures regardless of incoming water temperature
- **Soft Start Wash Pump** - Protects dishes and glasses from chipping or breaking
- **Aqua-Stop** - Automatically turns off incoming water supply should leakage occur
- **Built-in Booster Heater with Power Rinse Pump** - Guarantees constant pressure and temperature during final rinse

## Standard Features:

- Variable programmed time cycles - 105, 150 and 210 seconds
- Maximum rack capacity of 34 racks per hour
- Utilizes only 1.09 gallons of rinse water per rack
- Fully automatic - automatic fill, automatic start, and automatic reset
- Pumped drain for both floor and wall drain applications
- Self cleaning cycle - automatic cleaning of the wash chamber following machine shutdown
- Stainless steel non-clogging wash and rinse arms
- Sloped ceiling is safer for the user and prevents dripping of soiled water onto sanitized ware
- Front mounted controls with digital cycle and temperature displays
- 3/4 Hp wash pump
- All 304 and 316L stainless steel construction for advanced corrosion resistance
- Double wall construction on sides and top
- Type A air gap system eliminates need for vacuum breaker
- Comes with one peg rack and one combination rack

## Technical Specifications:

**Optimum Capacity:**

| | |
|---|---|
| Racks per hour | 34 |
| Dishes per hour | 850 |
| Glasses per hour | 1224 |

**Optimum Cycle Time (Seconds):**

| | |
|---|---|
| Wash Cycle | 81 |
| Dwell / Drain Time | 15 |
| Rinse Cycle | 9 |
| Total Cycle | 105 |

**Water Requirements:**

| | |
|---|---|
| Gallons per Rack | 1.09 |
| Gallons per Hour | 37.1 |
| Flow Pressure (psi) | 8.7-72.5 |
| Incoming Waterline | 3/4" Male Garden Hose |
| Drain line Size | 3/4" OD Flexible Hose |

**Required Operating Temperatures:**

| | |
|---|---|
| Incoming Water (Optimum) | 140°F |
| Wash (Minimum) | 150°F |
| Rinse (Minimum) | 180°F |

**Tank Capacities:**

| | |
|---|---|
| Wash Tank | 3.48 Gallons |
| Booster Heater | 1.71 Gallons |

**Electrical Requirements:**

| | |
|---|---|
| Wash Tank Heat | 2 kW |
| Booster Heater | 6 kW |
| Wash Pump | 3/4 HP |

Approximate Total Load Amps:

- 208-230/60/1 ..... 36.4A @ 208V, 40.0A @ 230V
- 208-230/60/3 ..... 25.7A @ 208V, 29.0A @ 230V

**Dimensions:**

| | |
|---|---|
| Overall (HxWxD) | 33-7/8" x 23-5/8" x 23-5/8" |
| Wall Clearance | Rear 1" min.; top & sides 0" min. |

**Ware Clearances (including rack):**

| | |
|---|---|
| HxWxD | 20" x 20" x 16-9/16" |

**Machine / Shipping Details:**

| | |
|---|---|
| Machine Weight | 161 lbs. |
| Shipping Weight | 205 lbs. |
| Shipping Size (HxWxD) | 39-1/2 x 28" x 29" |


Meiko • 917 Airpark Center Drive • Nashville, TN 37217 • (800) 55-MEIKO • FAX (615) 399-6620 • *www.meiko.us*

## Dimensions

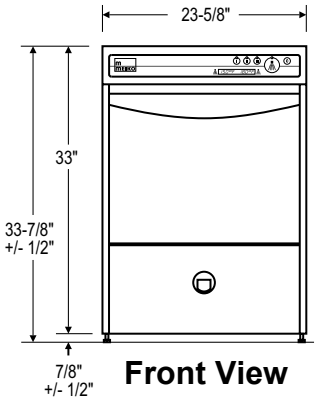


**Front View**

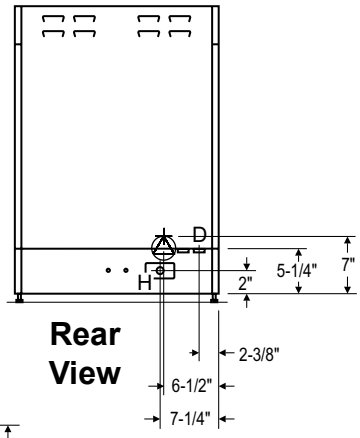


**Rear View**

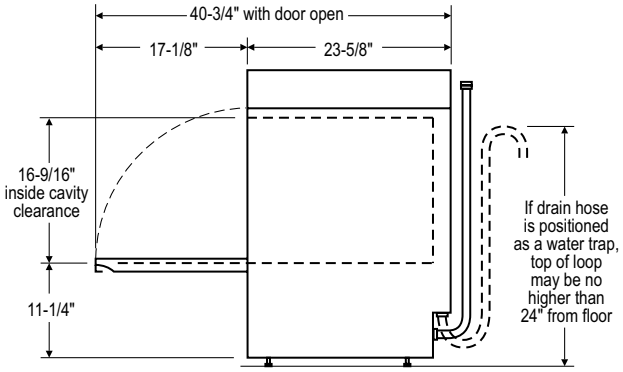


**Side View**

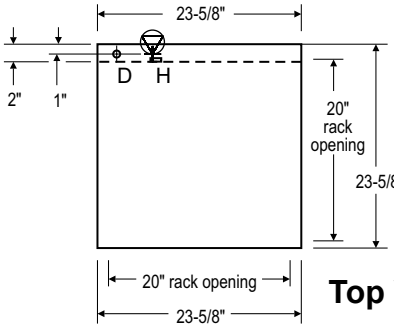


**Top View**

**H -** *Fresh water connection*

Requires hookup to 3/4" male garden hose fitting. Supplied hose extends 4'7" from machine connection.

**D -** *Drain hose connection*

Requires indirect connection to 1-1/2" drain pipe (wall or floor). Supplied drain hose extends 4"7" from machine connection.

*- Electrical supply connection*

Strain relief is provided at lower rear of machine. Terminal block is accessed by removing rear panel. Adequate slack in the wiring connection should be provided to allow the machine to be removed for servicing.

### *"Auto Safe"* Feature

The FV 40.2 guarantees that the minimum NSF temperature requirements of 150°F during the wash and 180°F during the final rinse are achieved regardless of the incoming water temperature, even if the dishmachine is installed to a cold water line. Exact rack capacity is dependent upon the incoming water temperature and on the electrical supply voltage.

| | @230V | | | @208V | | |
|---|---|---|---|---|---|---|
| **Incoming Temp.** | 140°F | 110°F | 70°F | 140°F | 110°F | 70°F |
| **Racks per Hour** | 34 | 25 | 17 | 33 | 22 | 14 |
| **Dishes per Hour** | 850 | 625 | 425 | 825 | 550 | 350 |
| **Glasses per Hour** | 1224 | 900 | 612 | 1188 | 792 | 504 |

***Note: All specifications are subject to change without notice based on Meiko's dedicated product improvement program.***

## Specification

FV 40.2 Item Number _____

Dishmachine shall be an NSF and UL-approved Meiko FV 40.2 hot water sanitizing undercounter dishmachine.

Unit shall be : _____ 208-230 V / 60 Hz / 1 Ph

_____ 208-230 V / 60Hz / 3 Ph

Unit shall have front mounted microcomputer controls, a 105 second total time cycle, and utilize 1.09 gallons fresh rinse water per cycle. Dishmachine shall utilize a fresh water pumped rinse for constant pressure and temperature every cycle. Unit shall have integral wash tank soil removal system to maintain clean wash water and have built-in temperature safeguards to guarantee washing and rinsing at minimum required temperatures. Wash pump shall be equipped with a smooth start feature to eliminate chipped and broken dishware. Unit shall also incorporate features to stop operation and shut off water flow to the machine should leakage occur. Machine shall have variable time cycles for heavier than normal soil loads.