robot coupe®

"The Inventor & World Leader in Food Processors"

"Series D"

CL50D

Commercial Food Processor

Continuous Feed Vegetable Prep

- Fan-cooled, heavy-duty, belt drive, 1.5 HP, Single phase motor.
- 39 available discs to select from.
- Has dicing and french fry capability.
- Attached large feed pusher assembly.
- Two deep feed openings.
- Automatic restart of machine with the half-moon shaped pusher.
- Attachments easily removed for maximum cleaning ability.
- Packed with two processing discs (C446SA & C450GPA) as standard.
- 1 year parts and labor warranty.

Prepare 1200 servings in 3 hours or less.

Vegetable prep attachment designed for quality continuous feed slicing, dicing, shredding, grating, french fry, and julienne. Accommodates 39 different processing discs.

Conforms to
UL NSF
Std 763 Std 8
Certified to
CAN/CSA
Std C22.2 No. 195
ETL LISTED 9900098

Robot Coupe U.S.A., Inc.
P.O. Box 16625
Jackson, MS 39236-6625
1-800-824-1646 • (601) 898-8411
FAX: (601) 898-9134
www.robotcoupeusa.com • e-mail: info@robotcoupeusa.com

SPECIFICATIONS ON REVERSE SIDE

robot coupe®

"The Inventor & World Leader in Food Processors"

"Series D"

CL50D

Commercial Food Processor

Specifications

STANDARD MODEL: includes motor base unit with continuous feed attachment, one 1/8" (3mm) slicing disc and one 1/8" (3mm) medium grating disc.

ELECTRICAL REQUIREMENTS: 120V, 60Hz, 12 Amps, single phase, 1 speed., NEMA 5-15 plug.

SWITCHING: Control panel with push-type on and off buttons.

MOTOR: 1.5 HP, 425 RPM, belt drive, fan-cooled.

WEIGHT: 41 lbs. net, 45 lbs. approximate shipping weight.

PROCESSING DISCS

* For Series D machines only

Slicing Discs

C444SA	1/32" (1mm)
C445SA	5/64" (2mm)
C446SA	1/8" (3mm)
C477SA	5/32" (4mm)
28128*	3/16" (5mm)
28129*	5/16" (8mm)
28130*	3/8" (10mm)
28131*	9/16" (14mm)
C422SA	3/4" (19mm)
28132*	25/32" (20mm)
28133*	1" (25mm)

Ripple Cut Slicers

C445W	5/64" (2mm)
C446W	1/8" (3mm)
C464W	3/16" (5mm)

Grating Discs

C494GPA	1/16" (1.5mm)
C451GPA	5/64" (2mm)
C450GPA	1/8" (3mm)
C475GPA	5/32" (4mm)
C453GPA	3/16" (5mm)
C478GPA	9/32" (7mm)
C433GPA	11/32" (9mm)
C495GPA	Fine Pulping
C452GPA	Hard Cheese Grate

French Fry Kits

28134*	5/16" (8mm)
28135*	3/8" (10mm)

Romaine Lettuce Kit

28133/104031	2"

Julienne Discs

C460JA	5/64" x 5/64" (2mm x 2mm)
C483JA	5/64" x 5/32" (2mm x 4mm)
C484JA	5/64" x 1/4" (2mm x 6mm)
C486JA	5/64" x 5/16" (2mm x 8mm)
C462JA	5/32" x 5/32" (4mm x 4mm)
C438JA	1/4" x 1/4" (6mm x 6mm)
C466JA	5/16" x 5/16" (8mm x 8mm)

Dicing Kits

28110	3/16" x 3/16" (5mm x 5mm)
28111	5/16" x 5/16" (8mm x 8mm)
28112	3/8" x 3/8" (10mm x 10mm)
28113	9/16" x 9/16" (14mm x 14mm)
28114	25/32" x 25/32" (20mm x 20mm)
28115	1" x 1" (25mm x 25mm)

OPTIONAL EQUIPMENT: 37 additional processing discs and single or multiple disc rack or wall-mounted disc rack.

STANDARDS: ETL electrical & sanitation, cETL (Canada)

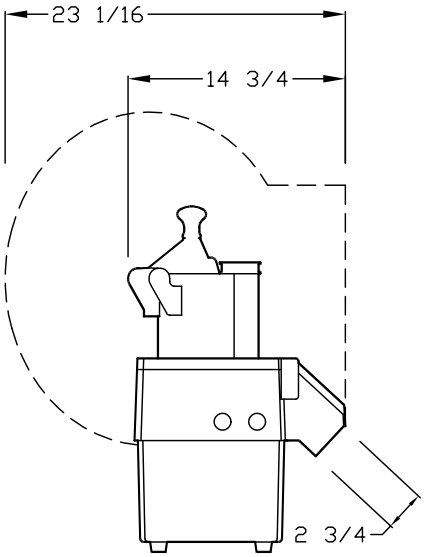

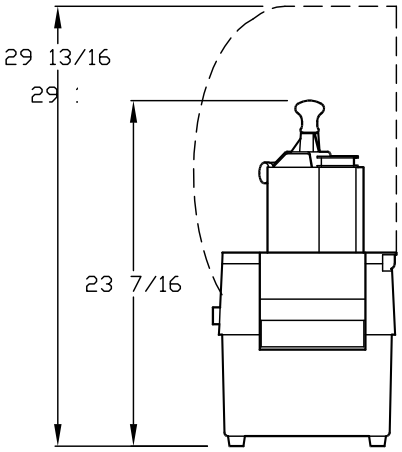

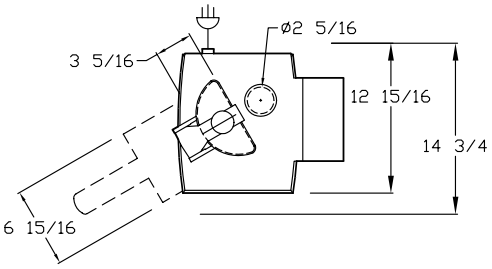

Robot Coupe U.S.A., Inc.
P.O. Box 16625
Jackson, MS 39236-6625
1-800-824-1646
(601) 898-8411
FAX: (601) 898-9134
www.robotcoupeusa.com
e-mail: info@robotcoupeusa.com

Distributed by:

Robot Coupe reserves the right to change specifications. Call the factory for latest specifications and recommendations.
© 2003 Robot Coupe U.S.A., Inc.

LItho in U.S.A. WKK 06/03