robot coupe®

"The Inventor & World Leader in Food Processors"

"Series D"

R301 & R301U

Commercial Food Processor

Combination Continuous Feed Vegetable Prep and Vertical Cutter Mixer

Prepare Sauces and Pate' in Bowl Unit

R301 Series D Model has Gray Bowl

R301U Series D Model has Stainless Steel Bowl

Prepare 2000 restaurant servings in 3 hours. Healthcare facilities can prepare puree diets daily for 12 residents.

Vegetable prep attachment designed for quality continuous feed slicing, shredding, grating, french fry, and julienne cuts. Accommodates 21 different processing discs. Bowl attachment designed for vertical cutting and mixing functions: Mix, chop, puree, and blend.

- 1.5 H.P. single phase motor with magnetic safety switch. Push button "On-Off" and "Pulse" switches.
- New motor base and vegetable prep attachment designed to be more user friendly, better sanitation and made from new material that is more resistant to chemical agents for a longer life span.
- New cutter bowl and lid design with:

  R301 Series D - Gray Bowl

  R301U Series D - Stainless Steel Bowl

  - ergonomic handle for easier handling.

  - 10% increased liquid capacity due to higher hub.

  - new safety system improves the life span of lid and safety rod.
- New integrated ventilation system position for better sanitation.
- Great disc selection to accommodate most veg prep applications.
- Attachments easily removed for assured sanitation.
- Unit base uses 13 1/16" x 11 15/16" of counter space.
- Packed with two processing discs (R209, 5/64" grating disc & R211, 5/32" slicing disc) as standard.
- 1 year parts and labor warranty.

Conforms to
UL NSF
Std 763 Std 8
Certified to
CAN/CSA
Std C22.2 No. 195
ETL LISTED 9900098

Robot Coupe U.S.A., Inc.
P.O. Box 16625
Jackson, MS 39236-6625
1-800-824-1646 • (601) 898-8411
FAX: (601) 898-9134
www.robotcoupeusa.com • e-mail: info@robotcoupeusa.

robot coupe®

"The Inventor & World Leader in Food Processors"

"Series D"

R301& R301U

Commercial Food Processor

Specifications

R301 SERIES D STANDARD MODEL: includes motor base unit with gray ABS plastic cutter bowl, stainless steel "S" blade, continuous feed attachment, one 1/8" (3mm) slicing disc and one 1/8" (3mm) medium grating disc and discharge plate.

R301U SERIES D STANDARD MODEL: includes motor base unit with stainless steel cutter bowl, stainless steel "S" blade, continuous feed attachment, one 1/8" (3mm) slicing disc and one 1/8" (3mm) medium grating disc and discharge plate.

ELECTRICAL REQUIREMENTS: 120V, 60Hz, 9 Amps, single phase. Contact your local electrician for local code requirements.

SWITCHING: Control panel with push-type on / off and pulse buttons.

MOTOR: 1.5 HP, 1725 RPM, direct-drive, fan-cooled.

WEIGHT: 40 lbs. net, 42 lbs. approximate shipping weight.

Available Disc Selection

Slicing Discs
27051 - 1/32" (1mm)
27555 - 5/64" (2mm)
27086 - 1/8" (3mm)
27566 - 5/32" (4mm)
27087 - 3/16" (5mm)
27786 - 1/4" (6mm)

Ripple Cut Slicers
27621 - 5/64" (2mm)

Graters
27588 - 1/16" (1.5mm)
27577 -5/64" (2mm)
27511 - 1/8" (3mm)
27046 - 1/4" (6mm)
27632 - 11/32" (9mm)
27078 - Hard Cheese Grate

Pulping
27079 - Fine pulping disc
27764 - Pulping disc

Julienne
27599 - 5/64" (2x2mm)
27080 - 5/64" x 5/32" (2x4mm)
27081 - 5/64"x1/4" (2x6mm)
27047 - 5/32" (4x4mm)
27610 - 1/4" (6x6mm)
27048 - 5/16" (8x8mm)

OPTIONAL EQUIPMENT: 19 additional processing discs.

STANDARDS: ETL electrical & sanitation, cETL (Canada)

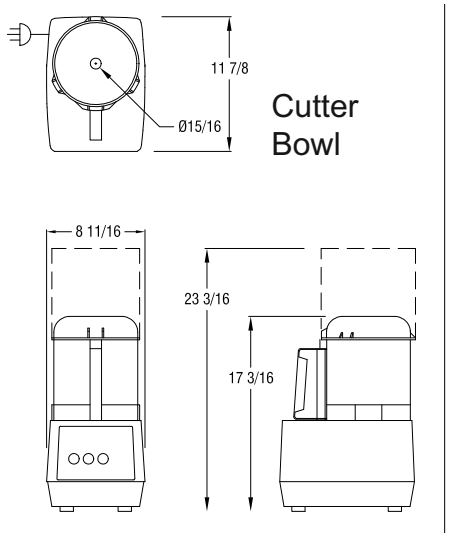

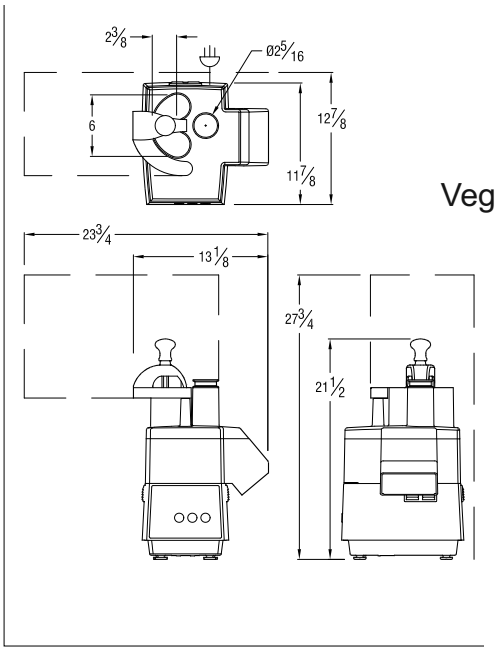

Robot Coupe U.S.A., Inc.
P.O. Box 16625
Jackson, MS 39236-6625
1-800-824-1646
(601) 898-8411
FAX: (601) 898-9134
www.robotcoupeusa.com
e-mail: info@robotcoupeusa.com

Distributed by:

Ref #10008 1/2007

Robot Coupe reserves the right to change specifications. Call the factory for latest specifications and recommendations.
© 2003 Robot Coupe U.S.A., Inc. LItho in U.S.A. WKK 06/03