SCOTSMAN

LARGE MODULAR ICE STORAGE BINS

Bin includes 6" legs w/ adjustable leveling.

BH1100
BH1300
BH1600

VOLUME STORAGE – AMPLE ICE RESERVE

- BH1100 – Holds up to 1100 lbs. of ice
- BH1300 – Holds up to 1400 lbs. of ice
- BH1600 – Holds up to 1775 lbs. of ice

QUALITY CONSTRUCTION

- All models available with all stainless steel construction or stainless steel with galvanized bac and bottom
- Features a roto-molded pouch door that is dent and scratch resistant. Provides excellent thermal break and doesn't sweat.
- The pouch style door can be installed without tools in less than 5 minutes.
- Pouch style door is shipped inside bin to provide a narrower bin for delivery through doorways.
- Adjustable bin top filler panels included for use with most Scotsman ice machines (See table on back for configurations requiring special bin tops)
- NSF approved construction

WARRANTY *See Dealer for complete warranty details .*

- 5 years parts and labor on all components.

CERTIFIED ISO 9001:2000

This product qualifies for the following listings:
Certified & rated in accordance with ARI standard 820-95

Scotsman®

Bin Specifications

1100 UPRIGHT

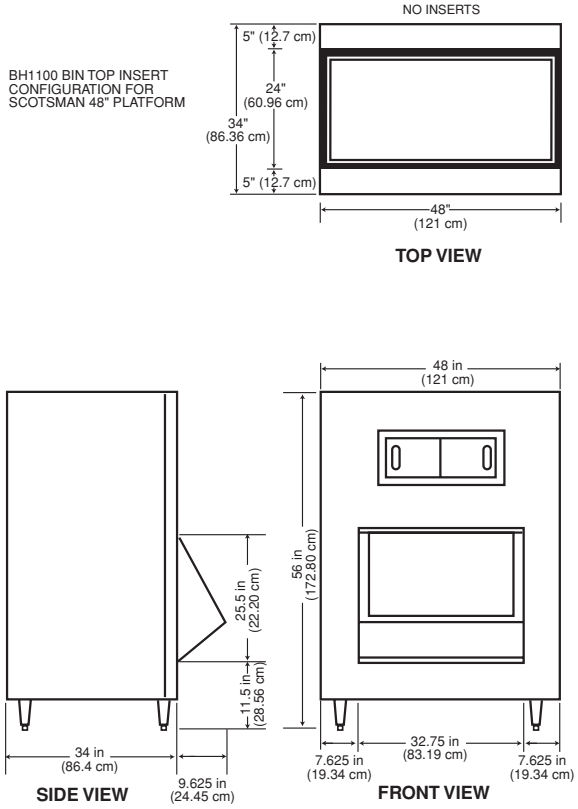

Drain: 1" FPT drain fitting

1300/1600 UPRIGHT

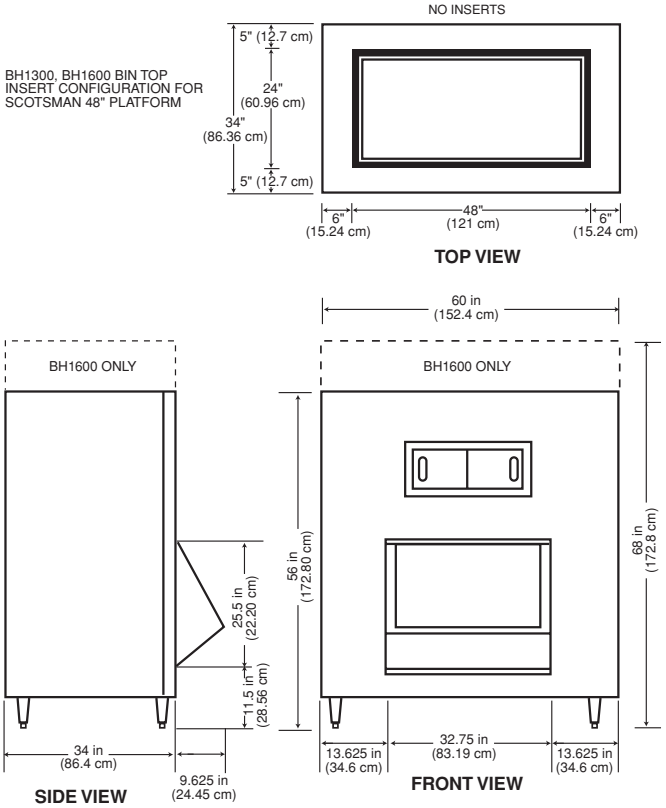

SCOTSMAN MODULAR BIN

Certified & rated in accordance with ARI standard 820-95

Model Number	Dimensions W"xD"xH" *	ARI Bin Capacity lbs./kg.	Application Capacity lbs./kg.	Finish **	Ship Weight lbs./kg.
BH1100	48" x 34" x 50"	860/393	1100/499	SS or BB	280/127
BH1300	60" x 34" x 50"	1100/499	1400/635	SS or BB	310/140
BH1600	60" x 34" x 62"	1375/624	1755/796	SS or BB	370/168

* Add 6" height for legs.

** SS - All Stainless Steel with Polyethylene Liner
BB - All Stainless Steel Except Galvanized Back and Bottom

Adjustable Bin Top filler panels are included for use with most Scotsman Ice Machines.
See table to right for exceptions.
Please contact your Scotsman representative to order the correct bin top for those configurations.

ARI storage capacity for bins is based on 80% of total volume in cubic feet x 30 lb./ft.3 average density of ice.
Application capacity for bins is based on 90% of total volume in cubic feet x 34 lb./ft.3 average density of ice.

Scotsman's ice machines and bins are not designed for outdoor installations.
Specifications and design are subject to change without notice.

Configurations Requiring Special Bin Tops

	BH1100	BH1300	BH1600
CME686	Always		
CME810	Always		
CME656	When Stacked	When Stacked or Side by Side	
CME806	When Stacked	When Stacked or Side by Side	
CME1056	When Stacked	When Stacked or Side by Side	
CME1386	None Required	When Side by Side	
CME1686	None Required	When Side by Side	
CME2086	None Required	When Side by Side	
CME1356	None Required	When Stacked	
CME1656	None Required	When Stacked	
CME2006	None Required	When Stacked	
MAR1400/2000	Always		

Consult Your Local SCOTSMAN Representative At:

YOU'LL VALUE THE DIFFERENCE™.
775 Corporate Woods Parkway • Vernon Hills, IL 60061 • 1-800-SCOTSMAN • Fax: (847) 913-9844
Visit our website at: www.scotsman-ice.com • E-mail: customer.service@scotsman-ice.com

Scotsman®

SB-BHLG-2 7M 11-05