Food Servers
Kettle Server

Model KS

Date: Project: Quantity: Item Number:

KS #84300

NSF-certified as a rethermalization unit

CE Units Available

Warranty

Server Products equipment is backed by a two-year limited warranty against defects in materials and workmanship. For a copy of our complete warranty statement, see our Website or contact us.

Bid Description

The water bath warmer/cooker in a traditional kettle shape is constructed of spun aluminum with a durable epoxy coating. Water vessel and hinged lid are stainless steel. Lid stays upright during ladling and features a rim that collects moisture and returns it to the food. Includes exclusive 11-quart (10.4 L) stainless steel inset and five double-sided soup flavor cards. Unit also accepts an exclusive 7-quart (6.6 L) inset; not included. Choose from black or copper colored models.

A precalibrated positive off/on thermostat controls a 1500 watt heating element. Temperature settings—marked on thermostat knob—range from 60° F (16° C) to 200° F (93° C). A green indicator light confirms unit has reached set temperature when unlit.

The Kettle Server will heat frozen product to serving temperature (165° F, 74° C) and is NSF-certified as a rethermalization unit.

Standard Features

Spun aluminum shroud with stainless steel vessels for durability

Also accepts an exclusive 7-quart (6.6 L) stainless steel inset

Adjustable precalibrated thermostat for accurate heat control

Temperature marks on knob with protective knob guard

Hinged lid stays upright during ladling for easy customer use

Lid rim returns moisture to the food to retain flavor

New handle assists in opening lid ergonomically—no more reaching

Now with slip resistant feet for added stability

Kettle Server Accessories

- ☐ 11-quart (10.4 L) Kettle Server Inset #84437
- ☐ 7-quart (6.6 L) Kettle Server Inset #84462
- ☐ 2-ounce (59 mL) Ladle #82660
- ☐ 4-ounce (118 mL) Ladle #82574
- ☐ 6-ounce (177 mL) Ladle #82661
- ☐ 8-ounce (237 mL) Ladle #82662

Specifications on reverse side

Food Servers
Kettle Server

Model KS

Kettle Server
KS #84300

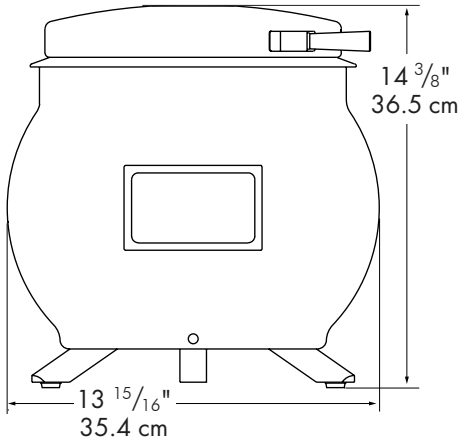

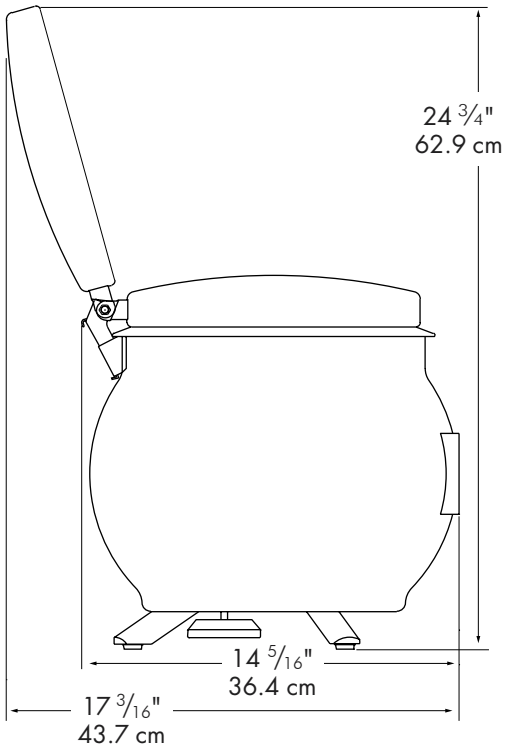

Specifications

Model	KS #84300
Construction	Spun aluminum with a durable epoxy coating. Water vessel, 11-quart (10.4 L) inset, and lid are stainless steel.
Capacity	Vegetable inset holds 11-quarts (10.4 L).
Dimensions	Height / Width / Depth in: 14 3/8 / 13 15/16 / 14 5/16 cm: 36.5 / 35.4 / 36.4 Height with lid open: 24 3/4 (62.9 cm)
Electrical	120V, 60Hz, 1500W, 12.5A 72 in (183 cm) cord set NEMA 5-15P, 15A, 125V PLUG
Ship Weight	21 lb (9.5 kg)
Options	Kettle Server KS #85740 is the copper colored version of the KS #84300 unit. Kettle Server KS #84290. Same as Kettle Server KS #84300 described above, except includes an exclusive 7-quart (6.6 L) inset. KS #85760 is the copper colored version of this unit. Ship weight is 20 lb (9.1 kg).

FOB Richfield, Wisconsin 53076

CAD Library

We are a member of The KCL CADalog with more than 100 other manufacturers. Our CAD files can be purchased through Kochman Consultants, Ltd. at 847-470-1195, or e-mail sales@kclcad.com. Their website is at www.kclcad.com.

Server Products, Inc. • P.O. Box 98 • Richfield, WI 53076 • Toll Free: 800-558-8722
Phone: 262-628-5600 • Fax: 262-628-5110 • pumps@execpc.com • www.server-products.com
Server Products, Inc. reserves the right to modify specifications without obligation. Printed in USA
8-2002/8M Stock #02054