Condiment/Concession Counter-Top Organizers

Models CO-4 CO-7 PPO-5 2PRS

Date: Project: Quantity: Item Number:

CO-4 #85120 **CO-7 #85130**

PPO-5 #85140

2PRS #85150

Bid Description

Designed with Euro styling, Server organizers have rounded corners and are constructed with brushed finish (#4) stainless steel and black ABS plastic.

Counter-Top Organizers, CO-4 and CO-7 have a slanted design for easier viewing and access to product in the back. Each open style unit is divided with bins approximately 3 in (7.6 cm) deep. CO-4 has four rectangular bins of equal size. CO-7 has five rectangular bins of equal size and two vertical bins large enough to store straws up to 8 in (20.3 cm) long.

Portion Pack Organizer, PPO-5 is top loading and channels portion packs to the front automatically replenishing supply. ABS plastic dividers separate unit into five equal compartments.

The Two-Pan Relish Server, 2PRS also features a slanted design to take up minimal counter space. Constructed of stainless steel with a brushed (#4) finish. Includes two clear polycarbonate lids and ½-ounce (15-mL) spoons and two exclusive black plastic pans. Pans hold 1-quart (.9 L) and are 4 in (10.2 cm) deep. A model with self-closing lids is also available.

Standard Features

Euro style with stainless steel and black plastic construction

Slanted, open style models organize and allow for easy access

PPO-5 channels portion packs to the front replenishing supply

2PRS, clear lids allow product to be visible, yet protected

2PRS is complete with lift out pans for easy cleaning and transporting of product

Lid slots on 2PRS allow spoon to remain covered in unit

Two-Pan Relish Server Accessories

- ☐ ABS Plastic Pan, 1-qt. (.9 L), 4 in (10.2 cm) deep #85151
- ☐ Snap-on Lid, #85161
- ☐ Polycarbonate Spoon, #85156

Specifications on reverse side

Condiment/Concession Counter-Top Organizers

Models CO-4 CO-7 PPO-5 2PRS

Counter-Top Organizers CO-4 #85120, CO-7 #85130

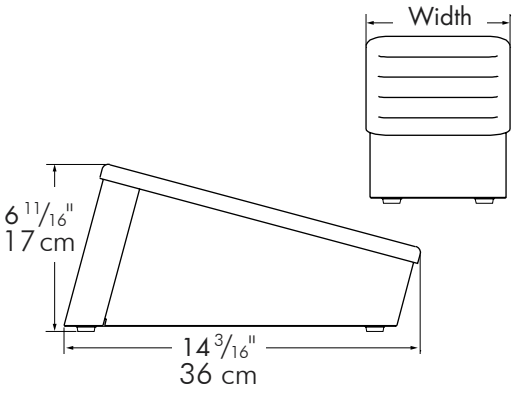

Portion Pack Organizers PPO-5 #85140

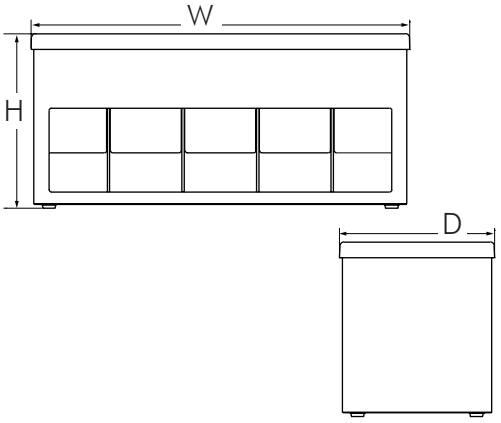

Two-Pan Relish Server 2PRS #85150

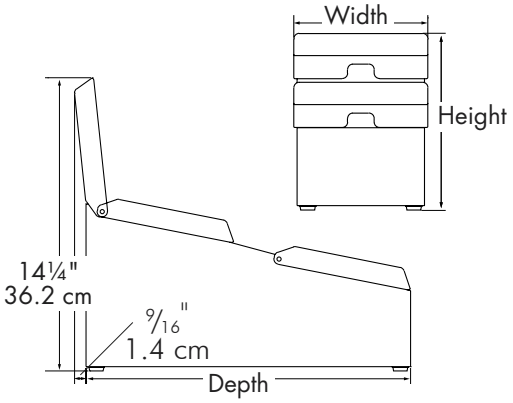

Specifications

Construction	Stainless steel with a brushed (#4) finish and black ABS plastic. 2PRS is stainless steel with a brushed (#4) finish, ABS plastic pans, and polycarbonate lids and spoons.
Capacity	2PRS, 4" (10.2 cm) deep: 1qt (.9 L)

Models		CO-4 #85120	CO-7 #85130	PPO-5 #85140	2PRS #85150
Height	in	6 11/16	6 11/16	9 3/8	8 5/16
	cm	17	17	23.8	21.1
Width	in	5 3/4	10 7/8	20 5/16	6 5/16
	cm	14.6	27.6	51.6	16
Depth	in	14 3/16	14 3/16	8 5/16	15 13/16
	cm	36	36	21.1	40.2
Ship Weight		5 lb	7 lb	11 lb	6 lb
		2.3 kg	3.2 kg	5 kg	2.7 kg

Height	(with lids open) 2PRS, 14¼ in (36.2 cm)
Option	2PRS #85160, same as 2PRS above, except with self-closing lids.

FOB Richfield, Wisconsin 53076

CAD Library

We are a member of The KCL CADalog with more than 100 other manufacturers. Our CAD files can be purchased through Kochman Consultants, Ltd. at 847-470-1195, or e-mail sales@kclcad.com. Their website is at www.kclcad.com.

Warranty

Server Products equipment is backed by a two-year limited warranty against defects in materials and workmanship. For our complete warranty statement, see our Website our contact us.

Server Products, Inc. • P.O. Box 98 • Richfield, WI 53076 • Toll Free: 800-558-8722
P: 262-628-5600 • F: 262-628-5110 • spsales@server-products.com • www.server-products.com

Server Products, Inc. reserves the right to modify specifications without obligation. Printed in U.S.A.

4-2003/8M Stock #02070