Star Manufacturing

Star-Max® Lava Rock Gas Char-Broilers

New STAR-MAX® LAVA ROCK GAS CHAR-BROILERS

Models 6015CBF, 6024CBF, 6036CBF & 6048CBF

Features/Benefits:

- ★ Star-Max® lava rock gas char-broilers are designed for the most demanding foodservice applications. Star-Max char-broilers deliver maximum performance and provide years of operation.
- ★ Available in 15", 24", 36" and 48" widths to fit many foodservice operation space requirements.
- ★ *NEW* longer lasting, heavy-duty metal knobs.
- ★ Designed with high performance 40,000 BTU H-style cast iron burners every 12" of width. Cast iron burners provide excellent broiling performance, better heat distribution and maximum sectional control.
- ★ Heavy-duty cast iron grates can be individually positioned (flat or slanted) to accommodate a variety of broiling needs. Grates are reversible with a thin side for searing and a thick side for more delicate menu items.
- ★ Natural lava rock briquettes provide superior heat distribution and vaporize drippings.
- ★ Stainless steel, 2-3/4" high tapered splash guard provides maximum protection against grease and spills.
- ★ Large capacity stainless steel water pan for easy clean up.
- ★ Cool-to-the-touch stainless steel bull nose front provides knob protection and comfortable work zone.
- ★ Gas convertible in the field with conversion kit supplied with each char-broiler. Units are shipped Natural Gas.
- ★ Double wall construction and enclosed bottom helps reduce heat loss.
- ★ Heavy-duty 4" inch adjustable legs to match the height of other Star-Max equipment in your line.

Model 6036CBF

Applications:

Star-Max® lava rock char-broilers are designed for high volume and reliability. Whether it's chicken, hamburger, steak, shish kabobs or any other items, Star's countertop char-broiler will fulfill your menu requirements.

Quality Construction:

Star-Max® line of lava rock char-broilers feature stainless steel cool to the touch front panel, bull nose, drip pan, splash guard, and grease trough. Double wall aluminized steel side panels with cast iron burners every 12 inches, adjustable valves and standing pilot are standard. Cooking surface consists of heavy duty, cast iron grates adjustable to flat or slanted positions. Can be converted to radiant style in the field.

GAS-FIRED c UL us LISTED

CLASSIFIED UL EPH

QUALITY MANAGEMENT SYSTEM STAR CERTIFICATION ISO 9001:2000

New Warranty:

Star-Max® lava rock char-broilers are covered by Star's **TWO YEAR** parts and labor warranty.

Star Manufacturing - 10 Sunnen Drive - P.O. Box 430129 - St. Louis, MO 63143-3800
Phone: (314) 678-6303 - FAX: (314) 781-5445 - www.star-mfg.com

Star Manufacturing

Star-Max® Lava Rock Gas Char-Broilers

New STAR-MAX® LAVA ROCK GAS CHAR-BROILERS

Models 6015CBF, 6024CBF, 6036CBF & 6048CBF

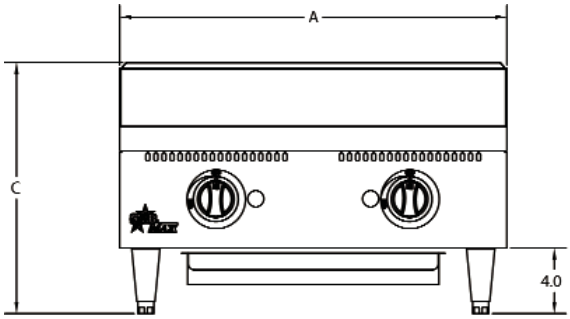

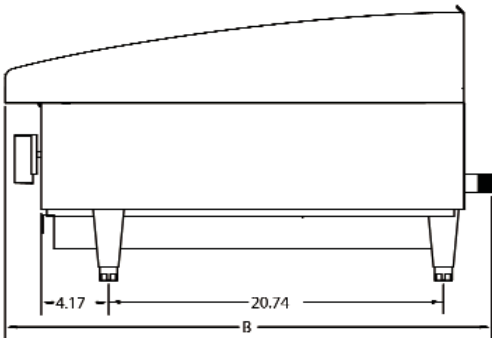

Specifications

Model No.	Dimensions (A) Width Inches (cm)	(B) Depth Inches (cm)	(C) Height Inches (cm)	(D) Leg Width Inches (cm)	No. Controls	BTU	Grid Area	Weight Installed lbs. (kg)	Shipping lbs. (kg)
6015CBF	15 (38.1)	29 (65.4)	15-1/2 (39.4)	12-3/4 (32.39)	1	*40,000	300 sq. in. 1935 sq. cm	97 (44.1)	121 (54.9)
6024CBF	24 (61.0)	29 (65.4)	15-1/2 (39.4)	20-3/4 (52.71)	2	*80,000	480 sq. in. 3097 sq. cm	153 (69.5)	186 (84.4)
6036CBF	36 (91.4)	29 (65.4)	15-1/2 (39.4)	32-3/4 (83.19)	3	*120,000	720 sq. in. 4645 sq. cm	192 (87.2)	230 (104.4)
6048CBF	48 (121.9)	29 (65.4)	15-1/2 (39.4)	44-3/4 (113.67)	4	*160,000	960 sq. in. 6194 sq. cm	299 (135.7)	350 (158.9)

*Units operate on Natural or Propane Gas - On propane gas 35,000 BTU/HR for every 12” (30.5cm) width

Accessories

Model No.	Description	Weight Shipping
LR-SM8	Replacement Lava Rock (One 5 lb. bag needed per every 12” width)	5 (2.27)

Typical Specifications

Gas char-broilers are constructed with stainless steel front panel and double wall aluminized steel side panels. Units are 40,000 BTU natural (35,000 BTU propane) cast iron burner for every 12" (30.5 cm) of width and are controlled by an adjustable valve. Lava rock briquettes provided for even heat distribution. Cooking surface is heavy-duty cast iron grate-type and is adjustable in height. A stainless steel water pan is provided. Control knobs are protected by a stainless steel bull nose front. A standing pilot is provided. Char-broilers are supplied with 4" (10.2 cm) high die cast nickel plated legs with a 1-3/8” (3.5 cm) adjustment. Gas connection is 3/4" N.P.T. male and a convertible pressure regulator is provided. Units are UL Gas Certified for U.S. and Canada. UL sanitation approved. Printed in the U.S.A.

Due to periodic changes in designs, methods, procedures, policies and regulations, the specifications contained in this sheet are subject to change without notice. While Star Manufacturing exercises good faith efforts to provide information that is accurate, we are not responsible for errors or omissions in information provided or conclusions reached as a result of using the specifications. By using the information provided, the user assumes all risks in connection with such use.

Star Manufacturing - 10 Sunnen Drive - P.O. Box 430129 - St. Louis, MO 63143-3800
Phone: (314) 678-6303 - FAX: (314) 781-5445 - www.star-mfg.com