Metalfrio | Solutions

ANGLED CURVE TOP SERIES

Enhanced product display

FEATURES

- Interior LED lights for POS attraction
- Curved tempered glass sliding lids
- White powder coated, baked on enamel exterior
- Painted white powder coated aluminum interior
- Angled baskets 8"W x 20.5"D x 9"H
- Removable rubber bumper guards / grill side
- Dual heavy-duty casters
- Control panel w/adj temp range +10 to -18°F
- Bottom drain with plug
- Lid lock and keys
- Refrigerant CFC-free R-134a
- 6-ft power cord and plug set

OPTIONS

- Custom graphics and light canopy

MSC-31C

MSC-41C

MSC-49C

MSC-66C

SPECIFICATIONS

Model	Baskets / Dividers	External Dimensions W x D x H	Gross Cu Ft	Net Cu Ft	Shipping Weight	Amps	H/P	Electrical
MSC-31C	3 / 3	31.0" x 26.8" x 28.8/33.5"	8.3	6.0	133	5.5	1/3	115/120V, 60Hz
MSC-41C	4 / 4	41.0" x 26.8" x 28.8/33.5"	11.5	8.5	166	5.5	3/8	115/120V, 60Hz
MSC-49C	5 / 5	49.0" x 26.8" x 28.8/33.5"	14.5	10.5	181	X.0	3/8	115/120V, 60Hz
MSC-66C	7 / 7	66.5" x 26.8" x 28.8/33.5"	20.5	15.3	232	X.0	3/4	115/120V, 60Hz

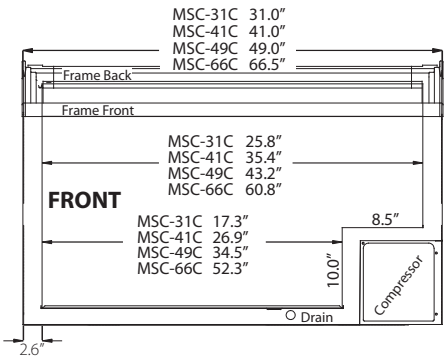

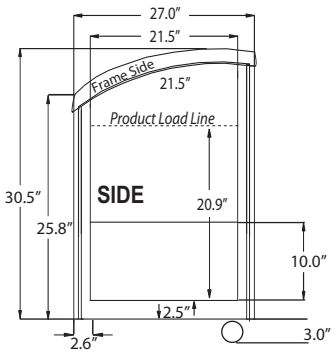

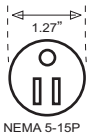

WARRANTY

18 Months Parts and Labor
5 Years Compressor (part only)

Administered by:
Metalfrio Solutions
(888) 403-0070 Toll Free

Product design and specifications are subject to modification by manufacturer without prior notice.

Metalfrio Solutions, Inc.
110 Enterprise Parkway - Boerne, TX 78006
(888) 403-0070 Toll Free - (888) 339-1904 Toll Free Fax
www.metalfrio.com - sales@metalfrio.com

Effective Date - June, 2012