# Pizza Prep Tables Refrigerated

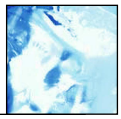

Project _____
Location _____
Item # _____
Qty _____

## Refrigerated pizza Tables

**Models:**

- ☐ **FPT-46**
- ☐ **FPT-67**

### Standard Features

- Stainless steel exterior and interior finish, ABS plastic interior door liner. S/S coved corner floor.
- Insulated top lid to keep moisture off your products.
- Forced air design underneath the pans to keep products fresher and maintain products at 33° - 41°F temperature in food pans and cabinet interior.• CFC-Free polyurethane insulation - foamed in place.
- Standard with rail system which holds (2) shelves per door and rails that can also accommodate (2) 12" x 20" foodservice pans (pans sold separately).
- Optional: Universal pan rails to be able to accommodate (1) 18" x 26" bun trays or (2) 18" x 13" half bun trays (trays sold separately).
- 19" full length removable and reversible white polyethylene cutting board.
- Standard with full sets of 1/3rd size pans, clear polycarbonate, 4" deep / will accommodate 6" deep inserts.
- Oversized and balanced refrigeration system (R-134A)
- Self closing doors with 120° stay open feature for convenient loading and unloading of products.
- Adjustable heavy duty epoxy coated wire shelves.
- 5" diameter swivel castors standard, front 2 with brakes.

**FPT-46 Shown**

**FPT-67 Shown**

Intertek Intertek AutoQuotes

*Conforms to UL and NSF-7 standards*

**PIZZA PREP TABLES**

| Model | Doors | Capacity | Top Pans | Shlvs. | Amps | HP | Voltage | NEMA Plug | Cord | Cabinet Dimensions L | D* | H** | Shipping Wt. | Cubes |
|---|---|---|---|---|---|---|---|---|---|---|---|---|---|---|
| **FPT-46** | 1 | 9.9 (280 liters) | 6 | 2 | 5.2 | 1/4 | 115/60/1 | 5-15P | 9′ (2.286mm) | 46″ (1169 mm) | 32″ (813 mm) | 39-1/8″ (994 mm) | 318 (144 Kg) | 63 (1.783 m³) |
| **FPT-67** | 2 | 18.6 (527 liters) | 9 | 4 | 7.2 | 1/3 | 115/60/1 | 5-15P | 9′ (2.286mm) | 67-1/4″ (1.708 mm) | 32″ (813 mm) | 39-1/8″ (994 mm) | 490 (222.1 Kg) | 72.8 (1.44 m³) |

*Depth does not include 1" bumper. **Height does not include 5" casters (6" overall) or 6" optional legs.

FAGOR

**Fagor Commercial, Inc.**
13105 N.W. 47th Avenue
Miami, FL 33054 USA
Ph: (305) 779 - 0170 • Fax: (305) 779 - 0173
**Toll Free: 1 - 866 - GO FAGOR**

MONDRAGON HUMANITY AT WORK Finance Industry Retail Knowledge

*www.fagorcommercial.com*

# FPT SERIES

## Pizza Prep Table

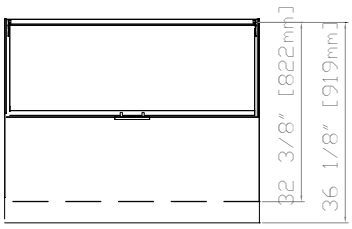


FPT-46 TOP

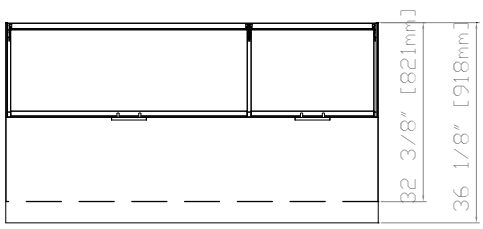


FPT-67 TOP

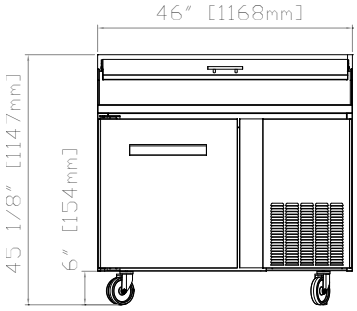


FPT-46 FRONT

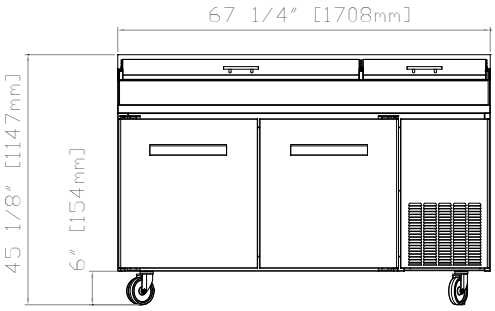


FPT-67 FRONT

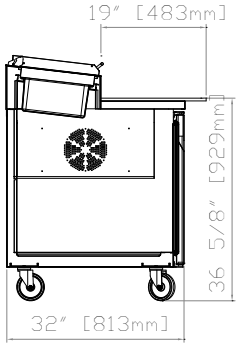


FPT SECTION

## Specifications

**Construction:** Heavy duty stainless steel exterior top, front and sides. Aluminized back panel. panel. Interior constructed of Stainless Steel interior walls and coved corner stainless steel floor.

Door is stainless steel exterior, step design ABS plastic interior with S/S hinged solid doors and positive seal. Magnetic door gaskets removable without tools, self closing with 120° stay open feature.

Recessed door handle. Door heaters provided on all freezers. Door openings have a plastic breaker strips to retard condensate formation.

Unit comes complete with a 2" CFC-Free polyurethane insulation, foamed in place. Two adjustable epoxy coated shelves provided per section.

**Refrigeration system:** Self contained capillary tube system using environmentally friendly (CFC Free) refrigerant. (R-134a) Front breathing for built-in applications. Epoxy coated evaporator coil is mounted to interior top panel encased in stainless steel. Large fan motor and fan blades for better air flow.

Tables are designed to maintain temperatures between 33° F to 38° F in the interior cabinet and 41° F in the top rail during normal operations.

**Features:** 19" wide removable and reversible cutting board, NSF approved white polyethylene, ½" deep.

Stainless steel insulated top lid keeps pan contents colder. Durable, long lasting, and removable for easy cleaning.

Comes standard with standard 1/3 size, clear polycarbonate, NSF approved 6" deep food pans.

**Others:** Unit is supplied standard with an 8' cord and plug (Nema 5-15p). Standard 4" diameter castors, front 2 with brakes.

**Warranty:** One year labor and parts warranty. 5 year compressor warranty (Continental U.S.A. and Canada only).

**Accessories:**
- ☐ 6" adjustable legs (set of 4)
- ☐ Epoxy coated shelves with supports
- ☐ 16 gauge S/S top
- ☐ S/S back panel
- ☐ Universal pan rails
- ☐ Shelf supports
- ☐ Factory reverse hinging, 46" unit only
- ☐ 220 volts / 50 cycles / 1 phase


**Fagor Commercial, Inc.**
13105 N.W. 47th Avenue
Miami, FL 33054 USA
Ph: (305) 779 - 0170 • Fax: (305) 779 - 0173
**Toll Free: 1 - 866 - *GO FAGOR***

**www.fagorcommercial.com**



The manufacturer reserves the rights to modify materials and specifications without notice.



Printed in the USA • 05/10