Metalfrio | Solutions

enerfreezer

HORIZONTAL TOP SERIES

LED Lights enhanced product display

FEATURES

- Interior LED lights for POS attraction
- Flat tempered glass sliding lids
- White zinc coated, baked on enamel steel exterior
- Painted white powder coated steel interior
- Flat top 3-compartment baskets
- Removable rubber bumper guards / grill side
- Dual heavy-duty casters / two locking
- Molded ABS/PVC lid frame
- External thermometer display
- Control panel w/adj temp range +10 to -18°F
- Bottom defrost drain with plug
- Lid lock and keys
- Refrigerant CFC-free R-134a (MSF31C, MSF43C, MSF52C)
- Refrigerant CFC-free R-404a (MSF71C)
- 6-ft power cord and plug set

OPTIONS

- Custom graphics and light canopy

MSF-43C

CONTROL PANEL
Thermostat, Power, LED Lights

SPECIFICATIONS

Model	Baskets/ Dividers	External Dimensions W x D x H	Gross Cu Ft	Net Cu Ft	Shipping Weight	Amps	H/P	Electrical
MSF-31C	2	31.0" x 27.0" x 36.5"	7.5	6.0	159	5.5	1/3	115/120V, 60Hz
MSF-43C	3	43.0" x 27.0" x 36.5"	11.5	9.0	192	5.5	3/8	115/120V, 60Hz
MSF-52C	4	52.0" x 27.0" x 36.5"	14.0	11.5	224	5.5	3/8	115/120V, 60Hz
MSF-71C	5	71.0" x 27.0" x 36.5"	20.0	16.5	280	6.0	3/4	115/120V, 60Hz

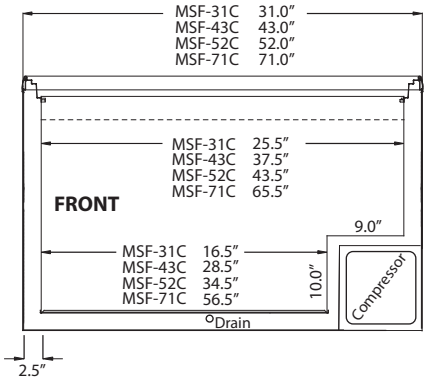

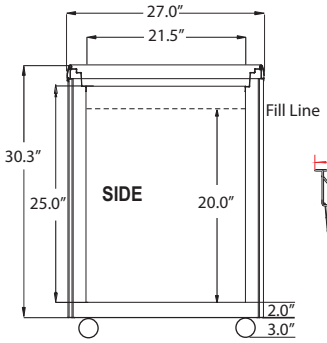

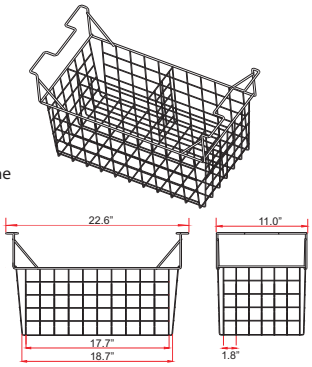

WARRANTY

18 Months Parts and Labor
5 Years Compressor (part only)

Administered by:
Metalfrio Solutions
(888) 403-0070 Toll Free

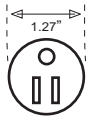

NEMA 5-15P

Product design and specifications are subject to modification by manufacturer without prior notice.

Metalfrio Solutions, Inc.
110 Enterprise Parkway - Boerne, TX 78006
(888) 403-0070 Toll Free - (888) 339-1904 Toll Free Fax
www.metalfrio.com - sales@metalfrio.com

Effective Date -August, 2012