SUMMIT

ALL-REFRIGERATOR

Models

FF511L	**FF511LBI**
FF521BL	**FF521BLBI**
SCR450L	**SCR450LBI**
SCR500BL	**SCR500BLBI**

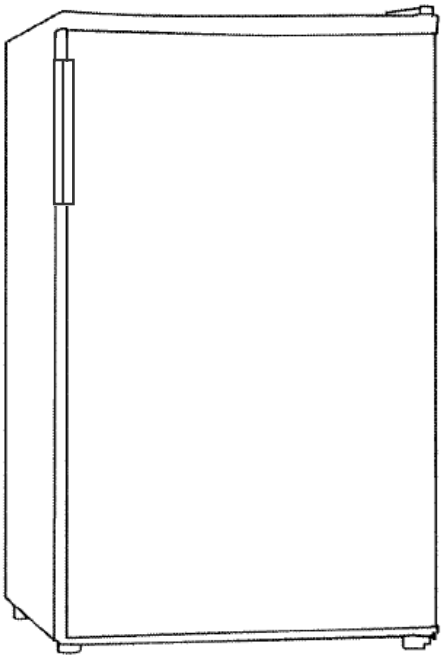

Owner's Manual

BEFORE USE, PLEASE READ AND FOLLOW
ALL SAFETY RULES AND OPERATING INSTRUCTIONS

Write the Serial Number here:

_____

FELIX STORCH, INC.
770 Garrison Avenue
Bronx, NY 10474
www.summitappliance.com

IMPORTANT SAFEGUARDS

Your safety and the safety of others are very important.

We have provided many important safety messages in this manual and on your appliance. Always read and obey all safety messages.

This is the Safety Alert Symbol. This symbol alerts you to potential hazards that can kill or injure you and others. All safety messages will follow the Safety Alert Symbol and either the words ”DANGER” or “WARNING”.

DANGER

DANGER means that failure to heed this safety statement may result in severe personal injury or death.

WARNING

WARNING means that failure to heed this safety statement may result in extensive product damage, serious personal injury, or death.

Safety messages will alert you to what the potential hazard is, tell you how to reduce the chance of injury, and let you know what can happen if the instructions are not followed.

Before the refrigerator is used, it must be properly positioned and installed as described in this manual, so read the manual carefully. To reduce the risk of fire, electrical shock or injury when using the refrigerator, follow basic precautions, including the following:

DANGER

- Plug into a grounded 3-prong outlet. Do not remove grounding prong, do not use an adapter, and do not use an extension cord.
- It is recommended that a separate circuit, serving only your refrigerator, be provided. Use receptacles that cannot be turned off by a switch or pull chain.
- Never clean refrigerator parts with flammable fluids. These fumes can create a fire hazard or explosion. And do not store or use gasoline or other flammable vapors and liquids in the vicinity of this or any other appliance. The fumes can create a fire hazard or explosion.
- Before proceeding with cleaning and maintenance operations, make sure the power line of the unit is disconnected.

- Do not connect or disconnect the electric plug when your hands are wet.
- Unplug the refrigerator or disconnect the power before cleaning or servicing. Failure to do so can result in electrical shock or death.
- Do not attempt to repair or replace any part of your refrigerator unless it is specifically recommended in this material. All other servicing should be referred to a qualified technician.

⚠ WARNING

- Use two or more people to move and install the refrigerator. Failure to do so can result in back or other injury.
- To ensure proper ventilation for your refrigerator, the front of the unit must be completely unobstructed. Choose a well-ventilated area with temperatures above 60°F (16°C) and below 90°F (32°C). This unit must be installed in an area protected from the elements, such as wind, rain, water spray or drips.
- The refrigerator should not be located next to ovens, grills or other sources of high heat.
- The refrigerator must be installed with all electrical connections in accordance with state and local codes. A standard electrical supply (115V AC only, 60 Hz), properly grounded in accordance with the National Electrical Code and local codes and ordinances, is required.
- Do not kink or pinch the power supply cord of the refrigerator.
- The fuse (or circuit breaker) size should be 15 amperes.
- It is important for the refrigerator to be leveled in order to work properly. You may need to make several adjustments to level it.
- Never allow children to operate, play with or crawl inside the refrigerator.
- Do not use solvent-based cleaning agents or abrasives on the interior. These cleaners may damage or discolor the interior.
- Do not use this apparatus for other than its intended purpose.

⚠ DANGER ⚠ *Risk of child entrapment*

Child entrapment and suffocation are not problems of the past. Junked or abandoned refrigerators are still dangerous, even if they will “just sit in the garage a few days.”

- **Before you throw away your old refrigerator:** Take off the doors. Leave the shelves in place so that children may not easily climb inside.
- Never allow children to operate, play with, or crawl inside the refrigerator.

- SAVE THESE INSTRUCTIONS -

Table of Contents

Important Safeguards ..... *1 - 2*
Location of Parts *3*
Technical Information *4*
Installation Instructions ..... *4 - 6*
- *Before Using Your Refrigerator* *4*
- *Installing the Refrigerator* ..... *4 - 5*
- *Electrical Connection / Extension Cord* *5*
- *Reversing the Door Swing / Door Handle Installation* *6*

Operating Your Refrigerator *7*
- *Setting the Temperature Control / Automatic Defrost System* *7*

Care and Maintenance ..... *8 - 9*
- *Cleaning Your Refrigerator / Power Failure / Vacation Time / Moving your Unit* *8*
- *Energy-Saving Tips* *9*

Problems with Your Refrigerator? (Troubleshooting) *10*
Limited Warranty *11*

Location of Parts

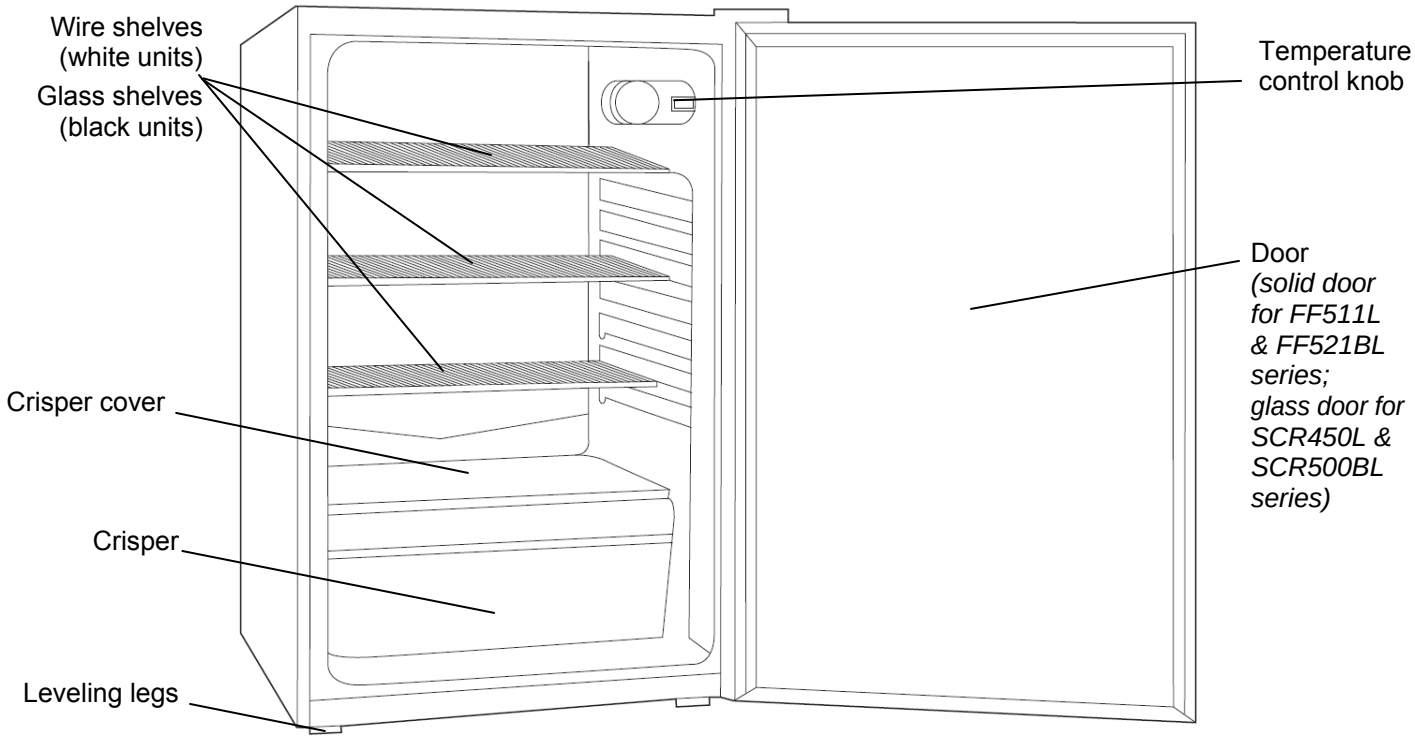

Technical Information

Models:	FF511L & FF511LBI (white with solid door)
	FF521BL & FF521BLBI (black with solid door)
	SCR450L & SCR450LBI (white with glass door)
	SCR500BL & SCR500BLBI (black with glass door)
Capacity:	4.1 cubic feet
Electrical Input:	115V AC / 60Hz
Rated Current:	1.4A
Power Input:	100W
Refrigerant:	R134a, 1.75 oz
Installation:	Free-standing (-L & -BL models)
	Built-in (-LBI & -BLBI models)
Unit Weight:	57 lbs
Unit Dimensions:	19⅞"W x 23¼"D x 33¼"H

[For built-in models, (-BI suffix), height can be adjusted from 33¼" to 34½"]

Installation Instructions

Before Using Your Refrigerator:

- Remove the exterior and interior packing.
- Check to be sure you have all of the following parts:
  - 3 wire shelves (models FF511L, FF511LBI, SCR450L & SCR450LBI)
  - 3 glass shelves (models FF521BL, FF521BLBI, SCR500BL & SCR500BLBI)
  - 1 crisper drawer with glass cover
  - 1 handle with screws and handle seal
  - 2 keys
- Before connecting the unit to the power source, let it stand for approximately 2 hours. This will reduce the possibility of a malfunction in the cooling system from handling during transportation.
- Clean the interior surface with lukewarm water using a soft cloth.

Installing the Refrigerator:

- Place your unit on a floor that is strong enough to support it when it is fully loaded. To level your unit, adjust the leveling legs at the bottom.
- Models FF511L, FF521BL, SCR450L and SCR500BL are designed to be free-standing only, and should not be recessed or built in. The four models with the suffix -BI are specifically designed to be built in.
- When installing models FF511L, FF521BL, SCR450L and SCR500BL, allow 5 inches of space between the back and sides of the unit, which will allow the proper air circulation to cool the compressor and condenser.
- When installing any of the built-in (-BI) models, allow 1” of space between the back of the appliance and the wall. If the appliance is going to be placed against a wall, if

possible, leave extra space on the hinge side so the door can open wider than its width (to make it easier to remove shelves and crisper drawer).

- Locate the unit away from direct sunlight and sources of heat (stove, heater, radiator, etc.). Direct sunlight may affect the acrylic coating and heat sources may increase electrical consumption. Extremely cold ambient temperatures may also affect the unit's performance.
- Avoid locating the unit in moist areas.
- Plug the unit into an exclusive, properly installed and grounded wall outlet. Do not under any circumstances cut or remove the third (ground) prong from the power cord. Any questions concerning power and/or grounding should be directed toward a certified electrician or authorized service center.
- After plugging the appliance into a wall outlet, allow the unit to cool down for 2 to 3 hours before placing food inside.

Electrical Connection:

⚠ WARNING

Improper use of the grounded plug can result in the risk of electrical shock. If the power cord is damaged, have it replaced by an authorized service center.

This unit should be properly grounded for your safety. The power cord of this unit is equipped with a three-prong plug which mates with a standard three-prong wall outlet to minimize the possibility of electrical shock.

Do not under any circumstances cut or remove the third ground prong from the power cord supplied. For personal safety, this appliance must be properly grounded.

This unit requires a standard 115-volt AC/60Hz electrical outlet with three-prong ground. Have the wall outlet and circuit checked by a qualified electrician to make sure the outlet is properly grounded. When a standard 2-prong wall outlet is encountered, it is your responsibility and obligation to have it replaced with a properly grounded 3-prong wall outlet.

To prevent accidental injury, the cord should be secured behind the unit and not left exposed or dangling.

The unit should always be plugged into its own individual electrical outlet which has a voltage rating that matches the rating label on the appliance. This provides the best performance and also prevents overloading house wiring circuits that could cause a fire hazard from overheated wires. Never unplug the unit by pulling on the power cord. Always grip the plug firmly and pull straight out from the receptacle. Repair or replace immediately any power cord that has become frayed or otherwise damaged. Do not use a cord that shows cracks or abrasion damage along its length or at either end. When moving the unit, be careful not to damage the power cord.

Extension Cord:

Do not use an extension cord with this appliance. If the power cord is too short, have a qualified electrician or service technician install an outlet near the appliance.

Reversing the Door Swing:

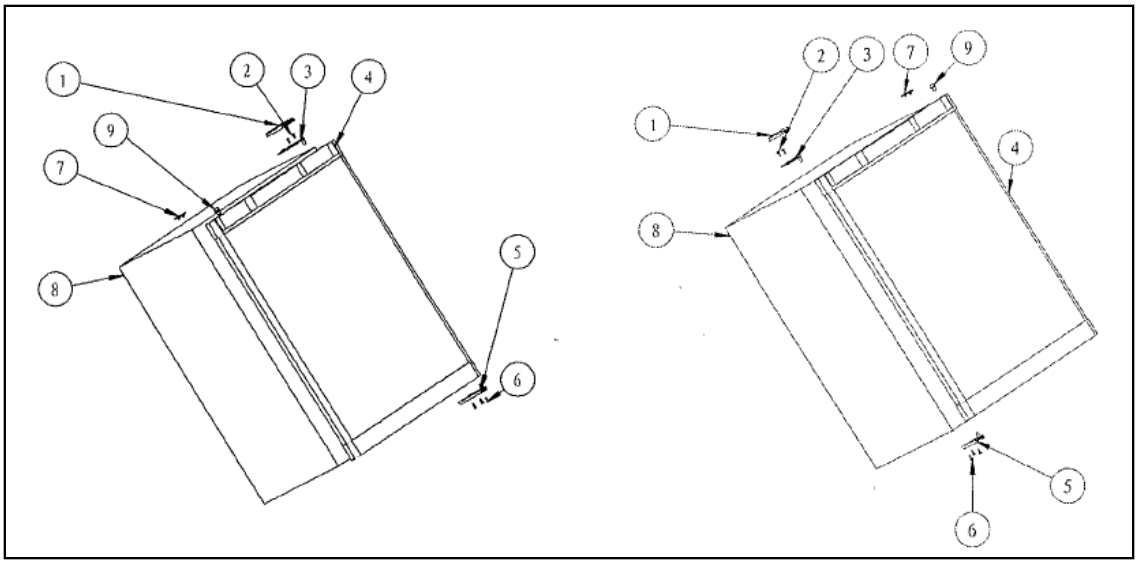

Figure 1 (Default position) *Figure 2 (After door reversal)*

1. Upper hinge cover
2. Screws
3. Upper hinge
4. Door
5. Lower door hinge
6. Screws
7. Hole cover
8. Cabinet
9. Pin cap

This refrigerator can be opened from either the right side or the left. By default, the door hinge is on the right side. If you prefer it on the left, please follow these instructions:

NOTE: All of the parts that are removed must be kept for the reinstallation of the door.

1. Remove the three screws (6) holding lower door hinge (5). Keep hinge for later use.
2. Remove the door from the upper hinge (3), and keep the padded surface upward to prevent scratching.
3. Remove the upper hinge cover (1), remove the two screws (2), remove the upper hinge (3) and keep it for later use.
4. Remove the hole cover (7) and transfer it to the same location on the opposite side.
5. Insert the lower door hinge (5) into the left side, fixing the hinge into place by tightening all the screws (6).
6. Remove the pin cap (9) from the left side of the upper door frame and then transfer it to the same location on the opposite side.
7. Set the door on the lower door hinge (5), keep the door level, then fix the upper hinge (3) to the body (8) by the screws (2).
8. Put on the upper hinge cover (1).

Door Handle Installation:

The door has two screw holes on each side, allowing you to install a handle (included). To do so, align the handle with the screw holes on the side you prefer. Fix the handle in place with the included screws, then cover the screw heads with the handle seal (included).

Operating Your Refrigerator

Setting the Temperature Control:

- Your unit has only one control for regulating the temperature in the compartment. The temperature control is located on the upper right-hand side of the compartment.
- When you turn the unit on for the first time, set the control to its coldest setting, which is **6**.
- The range of the temperature control is from the **Off** position to **6**. After 24 to 48 hours, adjust the temperature control to the setting that best suits your needs. The setting **3** should be appropriate for home or office use.
- To turn the appliance off, turn the temperature control to **Off**.

NOTES:

1. Turning the temperature control to **Off** stops the cooling cycle but does not shut off the power to the unit.
2. If the unit is unplugged, has lost power, or is turned off, you must wait 3 to 5 minutes before restarting the unit. If you attempt to restart before this time delay, the unit will not start.

Automatic Defrost System:

It is not necessary for you to defrost this appliance. While the compressor is operating, ice may build up along the cold rear wall of the refrigerator compartment (the evaporator is behind the wall). During the compressor's off-cycle, the ice will melt, drip down, and drain through a small hole behind the crisper into a tray above the compressor where the compressor's heat evaporates the water.

If you notice an excessive build-up of ice on the rear wall, try setting the thermostat to a slightly warmer setting. Be sure the door gasket is well seated. Occasionally you should check that there is no obstruction of the drain hole in the bottom rear of the cabinet.

Care and Maintenance

Cleaning Your Refrigerator:

1. Turn the temperature control to **Off**, unplug the unit and remove the food and shelves.
2. Wash the inside surfaces with a solution of warm water and baking soda. The solution should contain about 2 tablespoons of baking soda to a quart of water.
3. Wash the shelves with a mild detergent solution.
4. Wash the outside cabinet with warm water and mild liquid detergent. Rinse well and wipe dry with a clean soft cloth.
5. Wring excess water out of the sponge or cloth before cleaning the area of the controls, or any electrical parts.

CAUTION: Failure to unplug the unit could result in electrical shock or personal injury.

Power Failure:

Most power failures are corrected within a few hours and should not affect the temperature of your unit if you minimize the number of times the door is opened. If the power is going to be off for a longer period of time, you need to take the proper steps to protect your food.

Vacation Time:

Short vacations: Leave the refrigerator operating during vacations of less than three weeks.

Long vacations: If the refrigerator will not be used for several months, remove all food and unplug the power cord. Clean and dry the interior thoroughly. To prevent odor and mold growth, leave the door open slightly, blocking it open if necessary.

Moving Your Unit:

1. Remove all the food.
2. Securely tape down all loose items inside your unit.
3. Turn the leveling legs up to the base to avoid damage.
4. Tape the door shut.
5. Be sure the unit stays secure in the upright position during transportation. Also, protect the outside of the unit with a blanket or similar covering.

Energy-Saving Tips:

- The unit should be located in the coolest area of the room, away from heat-producing appliances and out of direct sunlight.
- Let hot foods cool to room temperature before placing in the unit. Overloading the unit forces the compressor to run longer.
- Be sure to wrap foods properly and wipe containers dry before placing them in the unit. This cuts down on frost build-up inside the unit.
- The unit's storage area should not be lined with aluminum foil, wax paper or paper toweling. Liners interfere with cold air circulation, making the unit less efficient.
- Organize and label food to reduce door openings and extended searches. Remove as many items as needed at one time, and close the door as soon as possible.

Problems with Your Refrigerator?

You can easily solve many common problems with your refrigerator, saving you the cost of a possible service call. Try the suggestions below to see if you can correct the problem before calling the service provider.

TROUBLESHOOTING GUIDE

Problem	Possible Cause
Unit does not operate.	Not plugged in. The circuit breaker has tripped or the fuse has blown. The unit's temperature control is set at **Off**.
Turns on and off frequently.	Room temperature is warmer than usual. A large amount of food has been added to the unit. The door is opened too often. The door is not closed completely. The temperature control is not set correctly. The door gasket does not seal properly. The unit does not have the correct clearances.
Vibrations	Check to be sure the unit is level.
The unit seems to be making too much noise.	A rattling noise may come from the flow of refrigerant, which is normal. As each cycle ends, you may hear gurgling sounds caused by the flow of refrigerant in your unit. Contraction and expansion of the inside walls may cause popping and crackling noises. The unit is not level.
The door will not close properly.	The unit is not level. The door was reversed and not properly re-installed. The gasket is dirty or bent. The shelves or the crisper are out of position.

Limited Warranty

ONE-YEAR LIMITED WARRANTY

Within the 48 contiguous United States, for one year from the date of purchase, when this appliance is operated and maintained according to instructions attached to or furnished with the product, warrantor will pay for factory-specified parts and repair labor to correct defects in materials or workmanship. Service must be provided by a designated service company. Outside the 48 states, all parts are warranted for one year from manufacturing defects. Plastic parts, shelves and cabinets are warranted to be manufactured to commercially acceptable standards, and are not covered from damage during handling or breakage.

5-YEAR COMPRESSOR WARRANTY

1. The compressor is covered for 5 years.
2. Replacement does not include labor.

ITEMS WARRANTOR WILL NOT PAY FOR:

1. Service calls to correct the installation of your appliance, to instruct you how to use your appliance, to replace or repair fuses or to correct wiring or plumbing.
2. Service calls to repair or replace appliance light bulbs or broken shelves. Consumable parts (such as filters) are excluded from warranty coverage.
3. Damage resulting from accident, alteration, misuse, abuse, fire, flood, acts of God, improper installation, installation not in accordance with electrical or plumbing codes, or use of products not approved by warrantor.
4. Replacement parts or repair labor costs for units operated outside the United States.
5. Repairs to parts or systems resulting from unauthorized modifications made to the appliance.
6. Expenses for travel and transportation for product service in remote locations.
7. The removal and reinstallation of your appliance if it is installed in an inaccessible location or is not installed in accordance with published installation instructions.

DISCLAIMER OF IMPLIED WARRANTIES – LIMITATION OF REMEDIES

CUSTOMER'S SOLE AND EXCLUSIVE REMEDY UNDER THIS LIMITED WARRANTY SHALL BE PRODUCT REPAIR AS PROVIDED HEREIN. IMPLIED WARRANTIES, INCLUDING WARRANTIES OF MERCHANTABILITY OR FITNESS FOR A PARTICULAR PURPOSE, ARE LIMITED TO ONE YEAR. WARRANTOR SHALL NOT BE LIABLE FOR INCIDENTAL OR CONSEQUENTIAL DAMAGES. SOME STATES DO NOT ALLOW THE EXCLUSION OR LIMITATION OF INCIDENTAL OR CONSEQUENTIAL DAMAGES, OR LIMITATIONS ON THE DURATION OF IMPLIED WARRANTIES OF MERCHANTABILITY OR FITNESS, SO THESE EXCLUSIONS OR LIMITATIONS MAY NOT APPLY TO YOU. THIS WARRANTY GIVES YOU SPECIFIC LEGAL RIGHTS AND YOU MAY ALSO HAVE OTHER RIGHTS, WHICH VARY FROM STATE TO STATE.

FELIX STORCH, INC.
770 Garrison Avenue
Bronx, NY 10474
Phone: (718) 893-3900
Fax: (718) 842-3093
www.summitappliance.com

SUMMIT

For parts and accessory ordering, troubleshooting and helpful hints, visit:
www.summitappliance.com/support