SMARTdri™

High-Efficiency Intelligent Hand Dryer

WORLD DRYER

SMARTdri™ is the most energy efficient, "best of the best", and fastest hygienic hand dryer. SMARTdri is designed to optimize dry time, energy consumption and sound quality. The intelligent, flexible controls allow customizing of air flow, sound quality and heating options to fit any application environments

Product Benefits

- Intelligent on/off heating and 3-speed motor controls provide flexible options
- 10 second drying time, 3X speed of the traditional hand dryer
- Best cost-in-use, saves more than 99% compared to paper towels
- Extremely energy efficient -- uses only 12% energy of traditional dryers
- Most powerful combination of air velocity and air flow
- Longest life of all high-speed dryers
- Improved sound level and quality
- Durable and vandal resistant
- Hygienic antimicrobial technology
- Automatic operation
- Contemporary stylish design

Architecture & Engineering Specifications

SMARTdri™ hand dryer shall be manufactured by World Dryer Corporation to include a cover constructed of either die-cast aluminum finished with epoxy paint or chrome plating; cold rolled steel finished with epoxy paint; stainless steel with a polished (bright) or brushed (satin) finish or cast iron with porcelain enamel finish. The wall mounting plate shall be constructed of die-cast aluminum and the nozzle shall be constructed of die-cast zinc alloy finished in either bright chrome or nickel plating. Epoxy painted covers and motor enclosure shall incorporate SteriTouch® antimicrobial technology. The cover shall be attached to the wall mounting plate with tamper-proof screws. Motor shall be a thermally-protected universal brush type motor operating at 23,400 RPM and delivering 100 CFM air flow at a velocity of 265 MPH (23,320 LFM). Dryer shall incorporate a 400 watt heating element constructed of Nichrome wire and protected by an automatic resetting thermal cutoff. Dryer shall be activated by an automatic infrared sensor with a 3 second run-on time and 30 second vandal shut-off. Control board shall contain a motor control switch which can be controlled in either Hi, MED and LOW power settings. Control board shall contain a heater control switch which can be controlled in either ON or OFF position. Dryer shall provide a 41°F temperature rise. Dryer shall have an ingress protection rating IP24. Hand dryers shall be listed under re-examination service of Underwriters Laboratories, Inc.

SMARTdri™ Product Specifications

Electrical

	110-120 V	208- 240 V	220 – 240 V
Amps	3.3- 10.0	1.8 - 5.2	1.7 -5.0
Watts	400 - 1200	425 - 1250	400 -1200
Hz	60	60	50

Cover material options:
Aluminum - die-cast aluminum finished with epoxy paint or chrome plating
Steel - cold rolled steel finished with epoxy paint
Stainless steel - with a polished (bright) or brushed (satin) finish
Cast Iron - with porcelain enamel finish

* Patented SteriTouch® Antimicrobial material reduces the spread of harmful bacteria.
** Recess kit is available for ADA compliance.

Cover Material	Cover Finish / Kit	110-120 V	208 - 240 V (60Hz)	220 - 240 V (50Hz)	Unit Weight	Unit Size (HxWxD) inch/mm	Shipping Size (HxWxD) inch/mm
Aluminum	White	# K-974	# K4-974	# K48-974	11.6 lbs/5.2 kgs	12.5" x 9.3" x 7.6" 319 x 236 x 192	14.7" x 11.4" x 10.8" 375 x 290 x 275
Aluminum	Polished Chrome	# K-970	# K4-970	# K48-970	11.6 lbs/5.2 kgs	12.5" x 9.3" x 7.6" 319 x 236 x 192	14.7" x 11.4" x 10.8" 375 x 290 x 275
Aluminum	Brushed Chrome	# K-971	# K4-971	# K48-971	11.6 lbs/5.2 kgs	12.5" x 9.3" x 7.6" 319 x 236 x 192	14.7" x 11.4" x 10.8" 375 x 290 x 275
Aluminum	Black	# K-162	# K4-162	# K48-162	11.6 lbs/5.2 kgs	12.5" x 9.3" x 7.6" 319 x 236 x 192	14.7" x 11.4" x 10.8" 375 x 290 x 275
Cast Iron	White	# K-976	# K4-976	# K48-976	22.0 lbs/9.9 kgs	12.5" x 9.3" x 7.6" 319 x 236 x 192	14.7" x 11.4" x 10.8" 375 x 290 x 275
Steel	White	# K-975	# K4-975	# K48-975	14.2 lbs/6.4 kgs	12.5" x 9.3" x 7.6" 319 x 236 x 192	14.7" x 11.4" x 10.8" 375 x 290 x 275
Stainless Steel	Polished	# K-972	# K4-972	# K48-972	14.2 lbs/6.4 kgs	12.5" x 9.3" x 7.6" 319 x 236 x 192	14.7" x 11.4" x 10.8" 375 x 290 x 275
Stainless Steel	Brushed	# K-973	# K4-973	# K48-973	14.2 lbs/6.4 kgs	12.5" x 9.3" x 7.6" 319 x 236 x 192	14.7" x 11.4" x 10.8" 375 x 290 x 275
Stainless Steel	Recess Kit	KKR-973			9.8 lbs/ 4.4 kgs	25.0"x 15.0"x 4.0" 635 x 381 x 102	30" x 15" x 7.88" 760 x 380 x 200

Surface Mounted

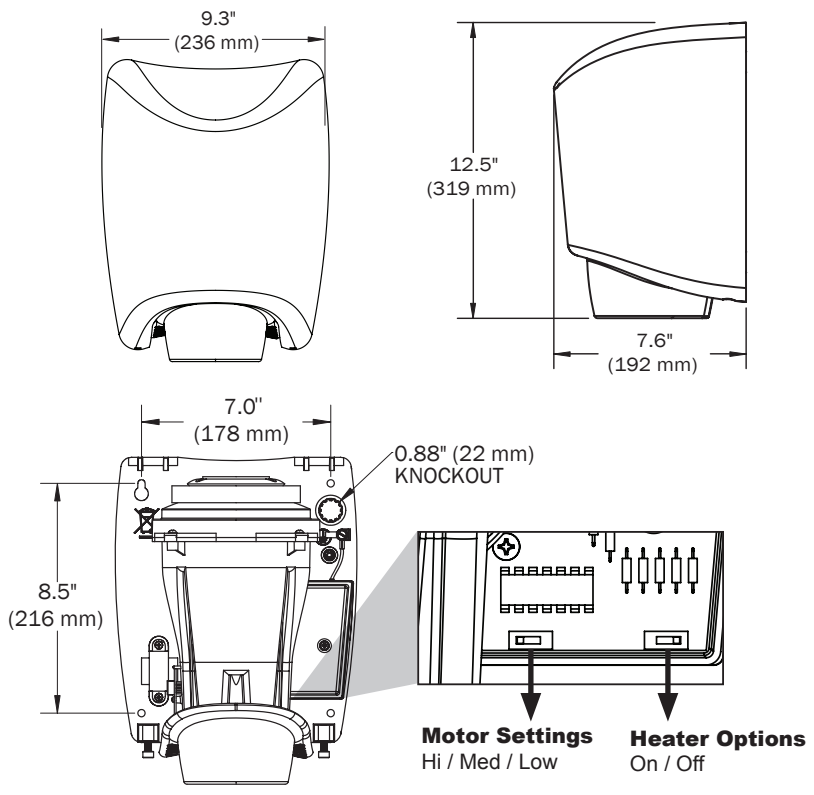

Recessed Mounted

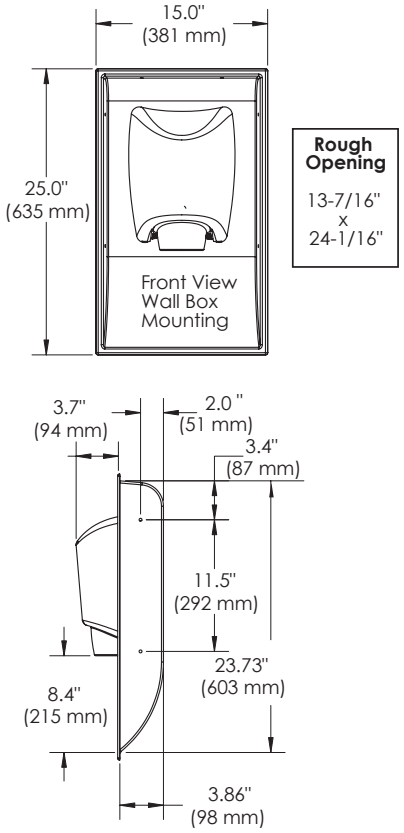

Placement Instruction

- Hand dryers should be spaced at least 2 feet apart, near but not over the wash basin
- In congested areas, dryers should be located to create a flow from wash basin to dryer to exit
- SMARTdri should be placed more than 18” above or away from reflective surfaces which may interfere with the automatic sensor operation.
- Dryer Quantity Recommendation:
  Average Traffic: 1 dryer per 2 wash basins
  Heavy Traffic: 1 dryer per wash basin
  Industrial 54” Circular wash fountains: 4 dryers per sink
- Recommended mounting heights from floor to dryer bottom edge

Men’s washrooms	46” (117 cm)
Women’s washrooms	44” (112 cm)
Children’s washrooms, ages 4-7	32” (81 cm)
Children’s washrooms, ages 7-10	36” (91 cm)
Children’s washrooms, ages 10-13	40” (102 cm)
Children’s washrooms, ages 13-17	44” (112 cm)
Handicap Mounting Height	37” (94 cm)

Installation Guide

- SMARTdri™ hand dryers require a dedicated 15 AMP circuit and must be properly grounded
- GFI circuit protection is recommended.
- One side of dryer should be mounted to a stud

Certification Approved

RoHs

c UL us

CE

www.tuv.com TÜV ID:1000000000 GS geprüfte Sicherheit

IP24

GreenSpec® LISTED www.GreenSpec.com

Warranty

limited 5 yr WARRANTY

5 year limited warranty

WORLD DRYER

5700 McDermott Drive
Berkeley, IL 60163 U.S.A.
800-323-0701
www.worlddryer.com

92-MT039A Rev05