Airforce

Hi-speed Energy-Efficient Hand Dryer

WORLD DRYER

Airforce is an energy efficient, hygienic and fast automatic hand dryer. Airforce is manufactured with patented SteriTouch antimicrobial material reducing the build-up and spread of germs, mold and bacteria. Its modern sleek design complements any washroom décor.

Product Benefits

- 12 second drying time, 2.5X speed of the traditional hand dryer
- 95% cost savings compared to paper towels
- Energy efficient -- uses only 48% energy of traditional dryers; 30%+ energy savings over competitive high speed dryers
- SteriTouch® anti-microbial technology helps prevent the build-up and spread of germs, mold and bacteria
- Innovative multi-port diffuser nozzle maximizes drying effective and comfort
- Low sound level
- Modular design for easy servicing
- Modem sleek design, easy cleaning
- Automatic operation
- Contemporary stylish design

Architecture & Engineering Specifications

Airforce™ Model J, J4, and J48 hand dryers shall be manufactured by or for World Dryer® Corporation. The hand dryer cover is to be an Aluminum housing finished in chrome plating or housing finished in epoxy paint that is incorporated with SteriTouch®* antimicrobial additive. Optional covers available in stainless steel or epoxy coated C.R. steel. Motor shall be universal brush type operating at 34000 RPM and shall be thermally protected. It shall deliver 105 cubic feet per minute of air volume at 206 MPH. Dryer shall be activated by an automatic active infrared sensor controlled by a circuit board with 1 second run-on time and 30 second vandal shut-off. Control board to have conformal coating. Dryer shall provide a 40°F temperature rise, and PC/ABS internal housing components to be V0 or V5 flame retardant. Hand dryers shall be listed under re-examination service of Underwriters Laboratories, Inc.

Electrical specifications:

	110-120 V	208- 240 V	220 – 240 V
Amps	9.6	4.8	4.8
Watts	1100	1100	1100
Hz	60	60	50

Cover options:

Cast Aluminum - with epoxy paint or chrome plating.
Steel - cold rolled steel finished with epoxy paint
Stainless steel - with a polished (bright) or brushed (satin) finish

* Patented SteriTouch® Antimicrobial material reduces the spread of harmful bacteria.
** Recess kit is available for ADA compliance.

110 -120 V	208 - 240 V	220 - 240 V	Operation	Mounted	Cover Material, Cover Finish	Unit Weight	Shipping Weight	Unit Size (HxWxD) inch/mm	Shipping Size (HxWxD) inch/mm
J-974	J4-974	J48-974	Automatic	Surface	Aluminum, White	7.3 lbs 3.3 kgs	8.7 lbs 3.9 kgs	10.7"x 8.9"x 6.5" 272 x 226 x 165	14.5"x 11.5"x 8.25" 368 x 292 x 210
J-970	J4-970	J48-970	Automatic	Surface	Aluminum, Polished	7.3 lbs 3.3 kg	8.7 lbs 3.9 kgs	10.7"x 8.9"x 6.5" 272 x 226 x 165	14.5"x 11.5"x 8.25" 368 x 292 x 210
J-971	J4-971	J48-971	Automatic	Surface	Aluminum, Brushed	7.3 lbs 3.3 kg	8.7 lbs 3.9 kgs	10.7"x 8.9"x 6.5" 272 x 226 x 165	14.5"x 11.5"x 8.25" 368 x 292 x 210
J-162	J4-162	J48-162	Automatic	Surface	Aluminum, Black	7.3 lbs 3.3 kg	8.7 lbs 3.9 kgs	10.7"x 8.9"x 6.5" 272 x 226 x 165	14.5"x 11.5"x 8.25" 368 x 292 x 210
J-975	J4-975	J48-975	Automatic	Surface	Steel, White	7.5 lbs 3.4 kg	9.0 lbs 4.1 kg	10.7"x 8.9"x 6.5" 272 x 226 x 165	14.5"x 11.5"x 8.25" 368 x 292 x 210
J-972	J4-972	J48-972	Automatic	Surface	Stainless Steel, Polished	7.5 lbs 3.4 kg	9.0 lbs 4.1 kg	10.7"x 8.9"x 6.5" 272 x 226 x 165	14.5"x 11.5"x 8.25" 368 x 292 x 210
J-973	J4-973	J48-973	Automatic	Surface	Stainless Steel, Brushed	7.5 lbs 3.4 kg	9.0 lbs 4.1 kg	10.7"x 8.9"x 6.5" 272 x 226 x 165	14.5"x 11.5"x 8.25" 368 x 292 x 210
KJR-973K-1 Optional Recess Kit **				Recessed	Stainless Steel, Brushed	8.4 lbs 3.8 kgs	11.9 lbs 5.4 kgs	25.0"x 15.0"x 4.0" 635 x 381 x 102	30"x 15"x 7.88" 760 x 380 x 200

Surface Mounted

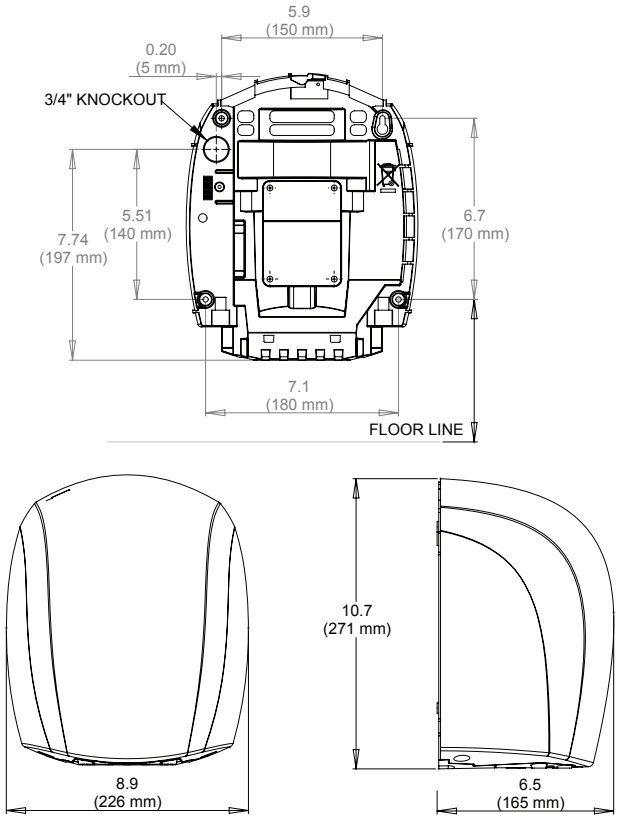

Recessed Mounted

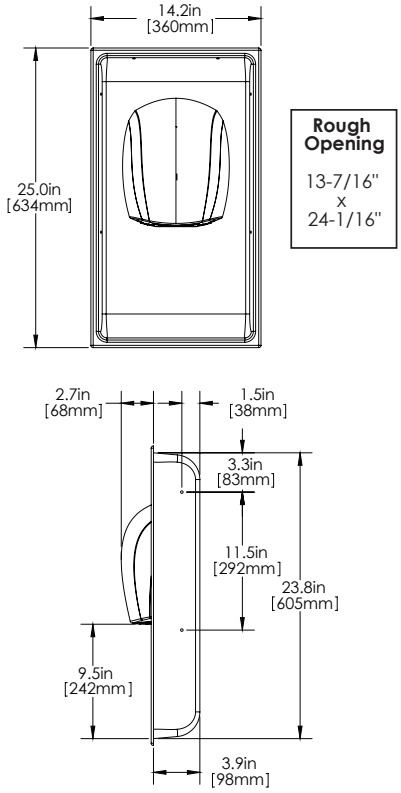

Placement Instruction

- Hand dryers should be spaced at least 2 feet apart, near but not over the wash basin
- In congested areas, dryers should be located to create a flow from wash basin to dryer to exit
- Airforce should be placed more than 18” above or away from reflective surfaces which may interfere with the automatic sensor operation.
- Dryer Quantity Recommendation:
  Average Traffic: 1 dryer per 2 wash basins
  Heavy Traffic: 1 dryer per wash basin
  Industrial 54” Circular wash fountains: 4 dryers per sink
- Recommended mounting heights from floor to dryer bottom edge

Men’s washrooms	46” (117 cm)
Women’s washrooms	44” (112 cm)
Children’s washrooms, ages 4-7	32” (81 cm)
Children’s washrooms, ages 7-10	36” (91 cm)
Children’s washrooms, ages 10-13	40” (102 cm)
Children’s washrooms, ages 13-17	44” (112 cm)
Handicap Mounting Height	37” (94 cm)

Installation Guide

- Airforce hand dryers require a dedicated 15 AMP circuit and must be properly grounded
- GFI circuit protection is recommended.
- One side of dryer should be mounted to a stud

Certification Approved

IP24

RoHs

Warranty

5 year limited warranty, 3 years motor & sensor

WORLD DRYER

5700 McDermott Drive
Berkeley, IL 60163 U.S.A.
800-323-0701
www.worlddryer.com

92-MT0005 Rev01