Model A Series Hand Dryers

Most Durable Industry Standard Hand Dryers

WORLD DRYER

World Model A series hand dryers are "the standard" hand dryers with the longest motor life and the best washroom solutions for all high traffic facilities.

Product Benefits

- Automatic or push-button operation
- Surface or recess mounted with ADA compliance
- Longest life of all dryers
- Lowest sound level
- Durable and vandal resistant
- Classic style design

Design Features

Dryer

- **Automatic unit** - Activated by infrared sensor, automatic drying cycle. Automatic drying cycle.
- **Push-button unit** - Activated by electro-mechanical timer with 25 Amp switch and 30 second cycle.
- Incorporates a 2100 (optional 1500) watt Nichrome wire heating element Protected by an automatic-resetting, thermal cutoff
- Provides a 70°F temperature rise
- IPX1 ingress protection

Motor

- Thermally-protected, universal brush-type motor operating at 7,500 RPM
- Delivering 154 CFM air flow at a velocity of 7,300 LFM

Materials

- Cover material: Cast Iron with porcelain enamel finish. Optional 14GA polished or brushed finish #304S.S. or epoxy enamel finish C.R. Steel.
- The wall-mounted base is constructed of die-cast aluminum
- The nozzle is constructed of die-cast zinc alloy finished in bright chrome

Architecture & Engineering Specifications

World Dryer Model A hand dryers shall include a cover made of 1/4" thick cast iron with porcelain enamel finish. Optional 14GA polished or brushed finish #304S.S. or epoxy enamel finish C.R. Steel. Motor shall be universal type, 1/10 HP at 7500 RPM. Dryers shall deliver 154 cubic feet per minute of air volume (7300 LFM). Timer shall be electro-mechanical cam-style with 25 AMP rated switch to operate dryer for 30 second period. Infrared sensor detect hands, initiates and terminates drying cycle. High-tech sensor control to provide 1,000,000 dry cycles. Recessed units use a 16-gauge steel wall mounting box. Hand dryers shall be listed under reexamination service of Underwriters Laboratories, Inc.

Model A Product Specifications

Electrical

	115 V	115 V	208 - 230 V	220 – 240 V	277 V
Amps	20	15	10	10	8.5
Watts	2300	1725	2300	2300	2300
Hz	60	60	60	50	60

Sound Level - 73 dBA @ operator ear (with hands)

Surface Mounted

Unit Size (HxWxD) 9.5" x 11.3" x 8.3" 241 mm x 287 mm x 211 mm

Shipping Size (HxWxD) 12.5" x 14.4" x 10.1" 317 mm x 366 mm x 256 mm

Recessed Mounted

Unit Size (HxWxD) 13.8" x 13.1" x 4" 351 mm x 333 mm x 102 mm

Shipping Size (HxWxD) 15" x 15" x 11.25 381 mm x 381 mm x 286 mm

Operation	Cover Finish	Cover Material	Mounting	Unit Weight	115 V, 15 Amp Stock #	115 V, 20 Amp Stock #	208-230 V Stock #	220 -240 V Stock #	277 V Stock #
Push-Button	White	Cast Iron	Surface	29 lbs/13.15 kgs	A52-974	A5-974	A54-974	A548-974	A57-974
Automatic	White	Cast Iron	Surface	29 lbs/13.15 kgs	XA52-974	XA5-974	XA54-974	XA548-974	XA57-974
Push-Button	White	Stamped Steel	Surface	18 lbs/8.16 kgs	DA52-974	DA5-974	DA54-974	DA548-974	DA57-974
Automatic	White	Stamped Steel	Surface	18 lbs/8.16 kgs	DXA52-974	DXA5-974	DXA54-974	DXA548-974	DXA57-974
Push-Button	Polished	Stainless Steel	Surface	18 lbs/8.16 kgs	DA52-972	DA5-972	DA54-972	DA548-972	DA57-972
Automatic	Polished	Stainless Steel	Surface	18 lbs/8.16 kgs	DXA52-972	DXA5-972	DXA54-972	DXA548-972	DXA57-972
Push-Button	Brushed	Stainless Steel	Surface	18 lbs/8.16 kgs	DA52-973	DA5-973	DA54-973	DA548-973	DA57-973
Automatic	Brushed	Stainless Steel	Surface	18 lbs/8.16 kgs	DXA52-973	DXA5-973	DXA54-973	DXA548-973	DXA57-973
Push-Button	White	Cast Iron	Recessed	35 lbs/15.8 kgs	RA52-Q974	RA5-Q974	RA54-Q974	RA548-Q974	RA57-Q974
Automatic	White	Cast Iron	Recessed	35 lbs/15.8 kgs	XRA52-Q974	XRA5-Q974	XRA54-Q974	XRA548-Q974	XRA57-Q974
Automatic	Brushed	Stainless Steel	Recessed	28 lbs/12.7 kgs	DXRA52-Q973	DXRA5-Q973	DXRA54-Q973	DXRA548-Q973	DXRA57-Q973

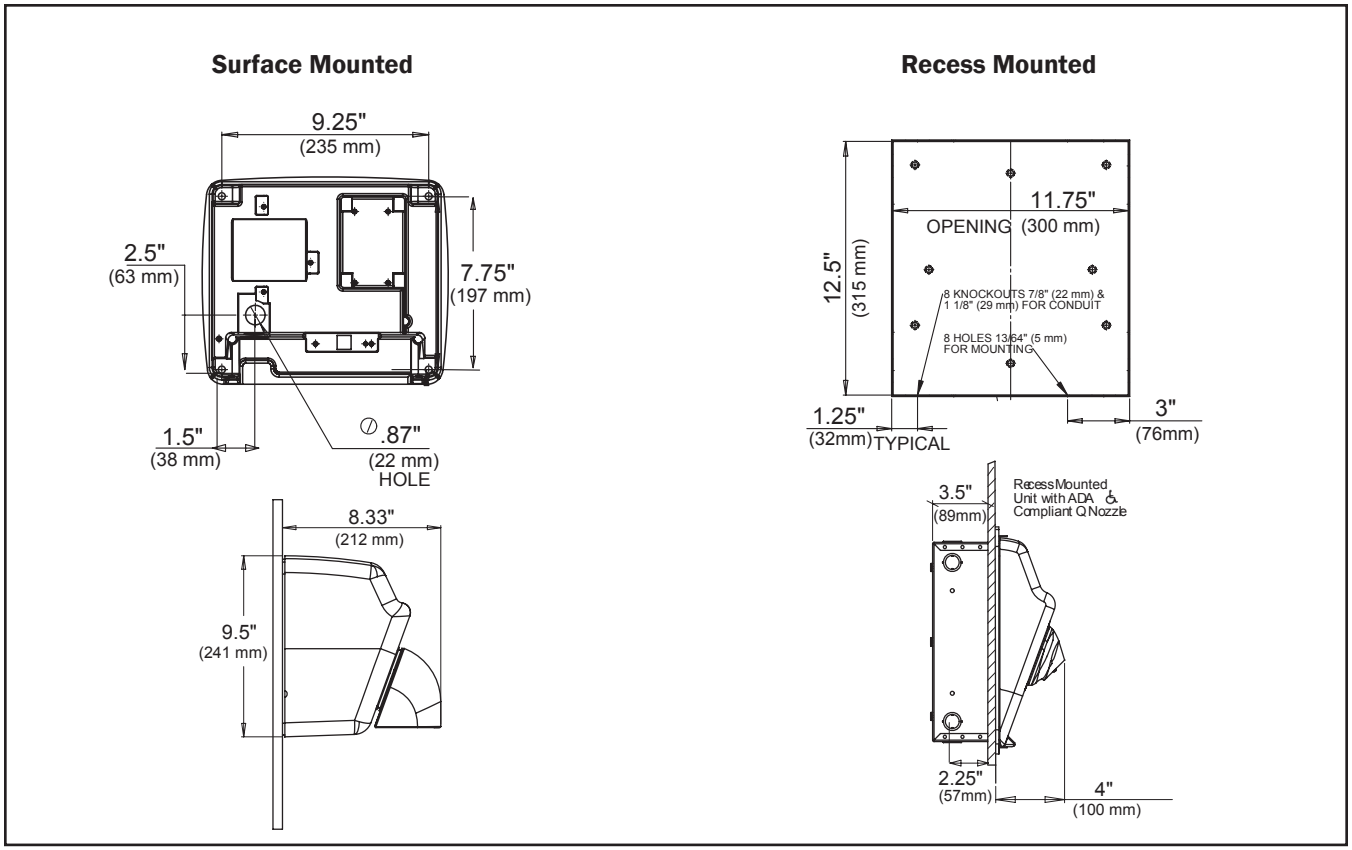

Placement Instruction

- Hand dryers should be spaced at least 2' apart, near but not over the wash basin
- Automatic dryers should be located more than 18" above or away from any reflective surface that may interfere with the sensor operation.
- In congested areas, dryers should be located to create a flow from wash basin to dryer to exit
- Dryer Quantity Recommendation:
  Average Traffic: 1 dryer per 2 wash basins
  Heavy Traffic: 1 dryer per wash basin
  Industrial 54" Circular wash fountains: 4 dryers per sink
- Recommended mounting heights from floor to dryer bottom edge

Washrooms	Surface Mounted	Recess Mounted
Men's washrooms	46" (117 cm)	42" (107 cm)
Women's washrooms	44" (112 cm)	40" (102 cm)
Children's washrooms, ages 4-7	32" (81 cm)	28" (71 cm)
Children's washrooms, ages 7-10	36" (91 cm)	32" (81 cm)
Children's washrooms, ages 10-13	40" (102 cm)	36" (91 cm)
Children's washrooms, ages 13-17	44" (112 cm)	40" (102 cm)
Handicap Mounting Height	37" (94 cm)	34" (86 cm)

Installation Guide

- Model A hand dryers require a dedicated 20 AMP circuit and must be properly grounded
- GFI circuit protection is recommended.
- One side of dryer should be mounted to a stud

Certification Approved

RoHS

c UL US

CE

IPX1

Warranty

limited 10 yr WARRANTY

5 year on sensor
3 year on motor brushes

10 year limited warranty

WORLD DRYER

5700 McDermott Drive
Berkeley, IL 60163 U.S.A.
800-323-0701
www.worlddryer.com