REFRIGERATOR MANUFACTURER
Turbo air
more durable,convenient,beautiful

1250 Victoria St
Carson, CA 90746
Tel. 310-900-1000
Fax. 310-900-1077
www.turboairinc.com

Project :	
Model # :	
Item # :	Qty :
Available W/H :	
Approval :	

Sandwich/Salad Unit

Food Prep Tables - Sandwich/Salad Prep
J Series

Model : JST-72

FEATURES / BENEFITS

Convenient Cutting Board Side Rail
Our cutting board is 9 1/2" deep and 1/2" thick to provide ample working space, and is made of easy to use and sanitize LDPE (Low Density Polyethylene). The new side rail cutting board bracket makes it easy to secure and remove the cutting board and it accepts different sizes too (max. 1/2" thickness)

Hot Gas Condensate System
Through Turbo Air's creative innovation, the condensate system surfaces have been specially treated to resist corrosion. This not only increases efficiency without the risk of refrigerant leakage from corrosion, but also prevents the overflow of condensate water.

Side Mount Compressor Unit
Through positioning the compressor to the side, the refrigerator can be serviced without being moved. By innovatively creating a front breathing feature, this model can provide high efficiency in narrow spaces.

Efficient Refrigeration System
Turbo Air's solid door refrigerators are designed with oversized and balanced (CFC Free R-134A) refrigeration systems. These include efficient evaporators and condensers for faster cooling and greater efficiency.

Exterior & Interior of the Cabinet
The Turbo Air J series boasts a stainless steel exterior (galvanized steel back and bottom). Interior is stainless steel floor with AL sides, back and AL door liners. It guarantees the utmost in cleanliness and long product life. It can add a touch of style to the most refined setting.

High-Density Polyurethane Insulation
The entire cabinet structure and solid doors are foamed-in-place using high density, CFC free polyurethane insulation.

Magnetic Door Gaskets
Magnetic door gaskets are of one piece construction, removable without tools for ease of cleaning and replacement.

Adjustable, Heavy Duty, PE(polyethylene) Coated Wire Shelves

Ergonomically Designed Doors
Customers' fatigue fades away with easy grip handles and doors that open effortlessly. These features along with self-closing doors make this the ultimate choice in customer convenience.

Refrigerator Holds 33°F ~ 39°F for the Best in Food Preservation

Intertek Intertek ISO9001 1 YEAR WARRANTY Compressor 5 YEAR WARRANTY (U.S.A only)

Model	Swing Door	CU./FT.	#of Shelves	#of Pans	#of Hood	HP	AMPS	Crated Weight (lbs.)	L x D*x H† (inches)
JST-72	3	18	3	18	2	1/4	4.8	275	70 7/8 x 27 3/8 x 35 3/4

Ver.201203

* Depth does not include 1-1/2" for cutting boards and 1" for rear spacers. † Height does not include 5-7/8" for caster height.

Sandwich/Salad Unit

Food Prep Tables - Sandwich/Salad Prep
J Series

Model : JST-72

ELECTRICAL DATA	
Voltage	115/60/1
Plug Type	NEMA-5-15P
Full Load Amperes	4.8
Compressor HP	1/4
Cord Length ft.	9
Refrigerant	R-134A
DIMENSIONAL DATA	
Ext. Length Overall in.	70 7/8 (1800mm)
Ext. Depth Overall in.*	27 3/8 (696mm)
Ext. Height Overall in.†	35 3/4 (908mm)
# of Doors	3
# of Shelves	3
# of Pans	18
Net Capacity cu. ft.	18
Gross Weight lbs.	275
Net Weight lbs.	254

Design and specifications subject to change without notice.
Actual shipping weight may differ due to extra packing materials for product protection.
* Depth does not include 1-1/2" for cutting boards and 1" for rear spacers.
† Height does not include 5-7/8" for caster height.

PLAN VIEW

(unit : inch)

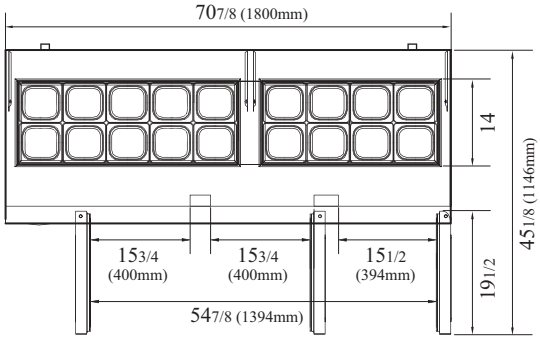

PLAN VIEW

- **WARRANTY :** 1 Year Parts and Labor Warranty
  Additional 4 Year Warranty on Compressor

- Self-Contained System
- 4" Dia. Swivel Casters
- Standard 1/6 Size, 4" Deep Condiment Pans Included
- 9 1/2" Deep, 1/2" Thick Cutting Board Included

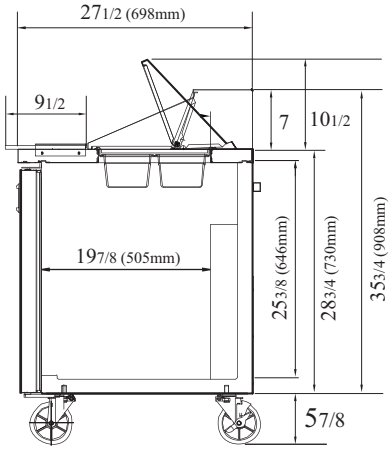

SIDE VIEW

- **OPTIONAL ACCESSORIES :**
  - ❑ 2.5" Diameter casters
  - ❑ 5" Diameter casters
  - ❑ 6" ABS plastic legs
  - ❑ Additional PE coated wire shelves

Ver.201203

Intertek Intertek ISO9001 1 YEAR WARRANTY Compressor 5 YEAR WARRANTY (U.S.A only)

- **Turbo Air** : 800-627-0032
- **GK** : 800-500-3519
- **Warranty** : 800-381-7770
- **AC** : 888-900-1002

Turbo air REFRIGERATOR MANUFACTURER GERMAN KNIFE RADIANCE GREEN WORLD Turbo air AIR CONDITIONER MANUFACTURER