REFRIGERATOR MANUFACTURER
Turbo air
more durable,convenient,beautiful

1250 Victoria St
Carson, CA 90746
Tel. 310-900-1000
Fax. 310-900-1077
www.turboairinc.com

Project :	
Model # :	
Item # :	Qty :
Available W/H :	
Approval :	

Back Bar

Underbar Equipment
Back Bars

Model : TBB-1SB

FEATURES / BENEFITS

- **Efficient Refrigeration System**
  Turbo Air's refrigerators are designed with oversized and balanced R-134A (CFC Free) refrigeration systems. Theses include efficient evaporators and condensers for faster cooling and greater efficiency.

- **Forced Air Cooling System**
  Fast cooling and balanced temperature throughout the cabinet.

- **Stainless Steel Countertop and Interior**
  The exterior of cabinet is constructed with heavy gauge reinforced stainless steel countertop and wear-resistant black vinyl coated galvanized steel. Interior is stainless steel floor and door liners with white painted galvanized steel inside walls. Turbo Air Back Bar model guarantees utmost in cleanliness and long product life. It also can add a touch of style to the most refined setting.

- **Fluorescent Interior Lighting for All Models**
  Bright fluorescent interior lighting is specifically designed for perfect visibility throughout the interior.

- **High-Density Polyurethane Insulation**
  The entire cabinet structure is foamed-in-place using high density, CFC free polyurethane insulation.

- **Adjustable, Heavy Duty, PE (polyethylene) Coated Wire Shelves**

- **Ergonomically Designed Doors**
  Customers' fatigue fades away with easy grip handles and doors that open effortlessly. These features along with self-closing doors make this the ultimate choice in customer convenience.

- **Refrigerator Holds 33°F ~ 38°F for the Best in Beverage Preservation**

Model	Swing Door	CU./FT.	1/2 Barrels	#of Shelves	HP	AMPS	Crated Weight (lbs.)	L x D*x H† (inches)
TBB-1SB	**1**	**7.5**	**1**	**2**	**1/10**	**4**	**235**	**23 5/8 x 32 1/8 x 37 3/4**

Ver.201203

* Depth does not include 2" for rear spacers. † Height does not include 5" for caster height.

Model : TBB-1SB

ELECTRICAL DATA	
Voltage	115/60/1
Plug Type	NEMA-5-15P
Full Load Amperes	4
Compressor HP	1/10
Refrigerant	R-134A
Cord Length (ft.)	9
Lamp (W)	13
DIMENSIONAL DATA	
1/2 Barrels	1
Cubic Feet	7.5
Ext. Length Overall in.	23 5/8 (599mm)
Ext. Depth Overall in.*	32 1/8 (816mm)
Ext. Height Overall in.†	37 3/4 (959mm)
Gross Weight lbs.	235
Net Weight lbs.	190
# of Swing Door	1

Design and specifications subject to change without notice.
Actual shipping weight may differ due to extra packing materials for product protection.
* Depth does not include 2" for rear spacers.
† Height does not include 5" for caster height.

PLAN VIEW

(unit : inch)

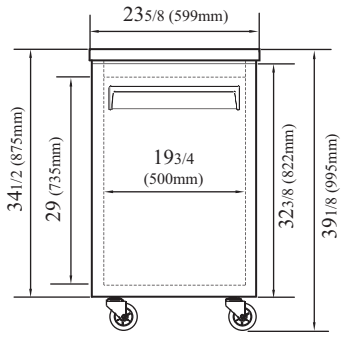

FRONT VIEW

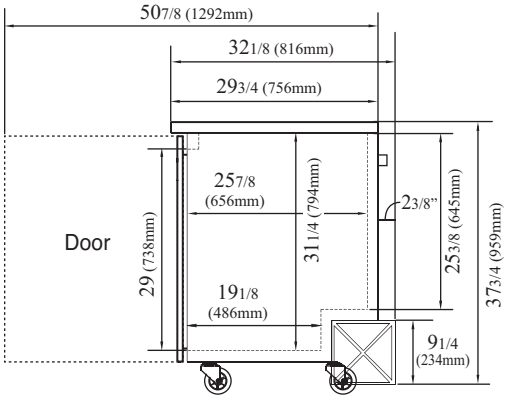

SIDE VIEW

- **WARRANTY :** 1 Year Parts and Labor Warranty
  Additional 4 Year Warranty on Compressor

- SELF-CONTAINED SYSTEM
- DOOR LOCKS STANDARD
- 4" SWIVEL CASTERS STANDARD

- **OPTIONAL ACCESSORIES :**
  - ❑ 2.5" Diameter casters
  - ❑ 5" Diameter casters
  - ❑ 6" ABS plastic legs
  - ❑ Additional PE coated wire shelves

Ver.201203