REFRIGERATOR MANUFACTURER
Turbo air
more durable,convenient,beautiful

1250 Victoria St
Carson, CA 90746
Tel. 310-900-1000
Fax. 310-900-1077
www.turboairinc.com

Project :	
Model # :	
Item # :	Qty :
Available W/H :	
Approval :	

Beer Dispensers

Underbar Equipment
Beer Dispensers

EXCEPTIONAL 2 YEAR PARTS & LABOR WARRANTY

Model : TBD-1SD/SB

TBD-1SD

TBD-1SB

- Does not include keg couplers
- 1 Year Parts and Labor Warranty for SB Unit

FEATURES / BENEFITS

Efficient Refrigeration System
Turbo Air's refrigerators are designed with oversized and balanced R-134A (CFC Free) refrigeration systems. Theses include efficient evaporators and condensers for faster cooling and greater efficiency.

Forced Air Cooling System
Fast cooling and balanced temperature throughout the cabinet.

Stainless Steel Cabinet Construction
Super Deluxe (SD) models boast a stainless steel exterior (except galvanized steel back and bottom). SB models are attractive wear-resistant black vinyl exterior. Heavy gauge stainless steel countertop is perfect for sanitation and durability. Interior is stainless steel floor and door liners with white painted galvanized steel inside walls. Turbo Air Beer Dispenser model guarantees utmost in cleanliness and long product life. It also can add a touch of style to the most refined setting.

High-Density Polyurethane Insulation
The entire cabinet structure is foamed-in-place using high density, CFC free polyurethane insulation.

3" Diameter Stainless Steel Insulated Beer Columns

Ergonomically Designed Doors
Customers' fatigue fades away with easy grip handles and doors that open effortlessly. These features along with self-closing doors make this the ultimate choice in customer convenience.

Side Mount Compressor Unit
Through positioning the compressor to the side, the refrigerator can be serviced without being moved. By innovatively creating a front breathing feature, this model can provide high efficiency in narrow spaces.

Incandescent Interior Lighting

Refrigerator Holds 33°F ~ 38°F for the Best in Beverage Preservation

Model	Swing Door	1/2 Barrels	HP	AMPS	Crated Weight (lbs.)	L x D* x H† (inches)
TBD-1SD	1	1	1/10	4	198	23 5/8 x 31 3/4 x 38 7/8
TBD-1SB	1	1	1/10	4	198	23 5/8 x 31 3/4 x 38 7/8

Ver.201203

* Depth does not include 2" for rear spacers. † Height does not include 5" for caster height. Height does not include 15-1/8" for draft arm.

Model : TBD-1SD/SB

ELECTRICAL DATA	
Voltage	115/60/1
Plug Type	NEMA-5-15P
Full Load Amperes	4
Compressor HP	1/10
Refrigerant	R-134A
Cord Length (ft.)	8.5
Lamp (w)	25W
DIMENSIONAL DATA	
Cubic feet (1/2 Barrels)	1
Ext. Length Overall in.	23 5/8 (600mm)
Ext. Depth Overall in.*	31 3/4 (806mm)
Ext. Height Overall in.†	38 7/8 (988mm)
Gross Weight lbs.	198
Net Weight lbs.	175
# of Swing Door	1

Design and specifications subject to change without notice.
Actual shipping weight may differ due to extra packing materials for product protection.
* Depth does not include 2" for rear spacers.
† Height does not include 5" for caster height. Height does not include 15-1/8" for draft arm.

- **WARRANTY : (SD Model)** 2 Year Parts and Labor Warranty
  Additional 3 Year Warranty on Compressor
- **WARRANTY : (SB Model)** 1 Year Parts and Labor Warranty
  Additional 4 Year Warranty on Compressor

- Self-Contained System
- 4" Swivel Casters Standard
- Door Locks Standard

PLAN VIEW

(unit : inch)

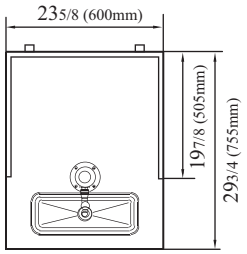

PLAN VIEW

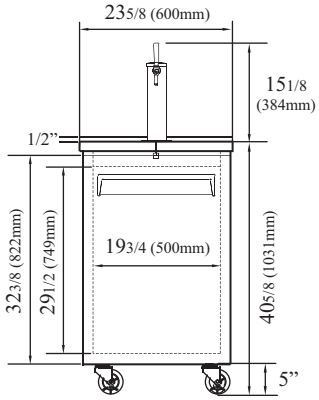

FRONT VIEW

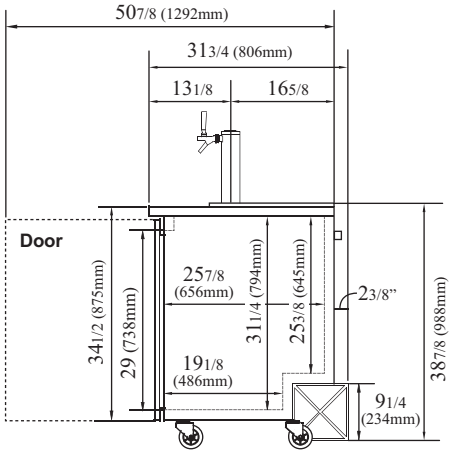

SIDE VIEW

Ver.201203