REFRIGERATOR MANUFACTURER
Turbo air
more durable,convenient,beautiful

1250 Victoria St
Carson, CA 90746
Tel. 310-900-1000
Fax. 310-900-1077
www.turboairinc.com

Project :	
Model # :	
Item # :	Qty :
Available W/H :	
Approval :	

Ice Merchandisers

Ice Merchandisers
Glass Door Merchandisers

Model : TGIM-49

FEATURES / BENEFITS

- **Digital Temperature Control System**
  Provides precise and constant temperature. This level of precision allows food products to remain fresh over an extended period of time.
- **High-Tech Monitor**
  The unit will beep if the door has been opened for more than 30 seconds. The monitor digitally displays the present temperature and current status of the freezer. You can easily change the temperature by adjusting the thermostat.
- **Efficient Refrigeration System**
  Turbo Air's freezers are designed with oversized and balanced (CFC Free R-404A) refrigeration systems. These include efficient evaporators and condensers for faster freezing and greater efficiency.
- **Automatic Evaporator Fan Motor Delays**
  Through stopping the evaporator fan when the freezer door opens, the circulation of hot, moist air into the freezer is prevented. This increases energy efficiency and lengthens the life of the compressor.
- **Ice Does Not Melt Even in Hot Climates**
  Turbo Air ice merchandisers are based on a freezer system which is adjusted to the ideal temperature range for bagged ice storage, whereas our competitors use refrigerator based systems. It maintains an avg. temperature of 12°F or below and eliminates ice melting problems during hot weather conditions.
- **LED Lighting Interior Display System**
  Brighter and longer lasting LED lights provide attractive, enhanced illumination compared to fluorescents.It saves energy by producing less heat, while maximizing the visibility in the display area.
- **Triple Pane Heated Glass Doors with Heat Reflecting Film**
  Equipped with unique triple pane heated glass doors with a layer of patented, transparent thermal insulating film applied between the glass layers. Lightweight door construction reduces door maintenance and roller wear, and facilitates smooth door opening.
- **Adjustable, Heavy Duty, PE (polyethylene) Coated Wire Shelves**
- **High-Density Polyurethane Insulation**
  The entire cabinet structure is foamed-in-place using high density, CFC free polyurethane insulation.
- **Magnetic Door Gaskets**
  Magnetic door gaskets are of one piece construction, removable without tools for ease of cleaning and replacement.
- **Bottom Mount Compressor Units**
  Turbo Air's bottom mount compressor allows easier access for service and extra storage space above. In addition, the lower area provides a cooler and less greasy operating environment which results in reduced compressor running time.
- **Freezer Holds 10°F~15°F for the Best in Bagged Ice Storage**

Intertek Intertek ISO9001 : 2008 1 YEAR WARRANTY Compressor 5 YEAR WARRANTY (U.S.A only)

Model	Swing Door	CU./FT.	#of Shelves	HP	AMPS	Crated Weight (lbs.)	L x D* x H (inches)
TGIM-49	2	46.2	6	2/3	9.0	505	54 1/2 x 30 3/8 x 76 7/8

Ver.201203

* Depth does not include 1-3/8" for door handle.

Model : TGIM-49

ELECTRICAL DATA	TGIM-49
Voltage†	115/208~230/60/1
Plug Type†	NEMA L14-20
Full Load Amperes	11
Compressor HP	1 1/2
Cord Length ft.	7
Refrigerant	R-404A
DIMENSIONAL DATA	
# of Doors	2
Net Capacity cu. ft.	49
Ext. Length Overall in.	54 3/8 (1382mm)
Ext. Depth Overall in.*	29 3/4 (756mm)
Ext. Height Overall in.	77 (1956mm)
Int. Length Overall in.	50 1/2 (1283mm)
Int. Depth Overall in.	26 1/8 (665mm)
Int. Height Overall in.	60 1/8 (1525mm)
Gross Weight lbs.	587
Net Weight lbs.	554
# of Shelves	8
Shelf Size (LxD) in.	21 3/4 x 22 1/2

Design and specifications subject to change without notice.
Actual shipping weight may differ due to extra packing materials for product protection.
* Depth does not include 1-3/8" for glass door handles.
† TGIM-49 requires dual voltage 115/208~230V (NEMA L14-20)

- **WARRANTY :** 1 Year Parts and Labor Warranty
  Additional 4 Year Warranty on Compressor

- 4" Swivel Casters Available (optional)

PLAN VIEW

(unit : inch)

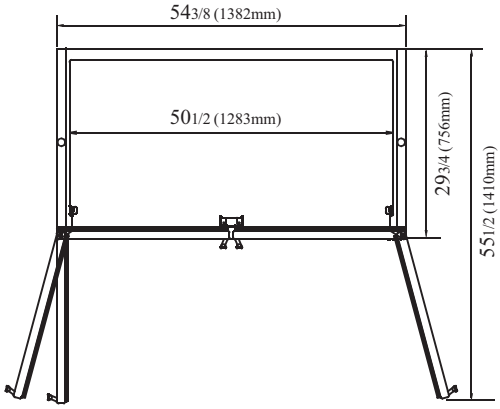

FRONT VIEW

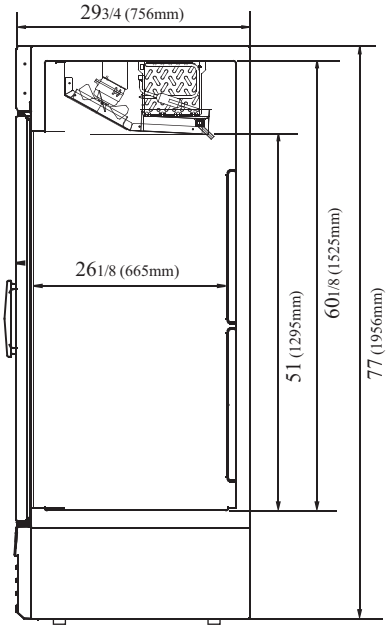

SIDE VIEW

Ver.201203

- Turbo Air : 800-627-0032
- GK : 800-500-3519
- Warranty : 800-381-7770
- AC : 888-900-1002