REFRIGERATOR MANUFACTURER
Turbo air
more durable,convenient,beautiful

1250 Victoria St
Carson, CA 90746
Tel. 310-900-1000
Fax. 310-900-1077
www.turboairinc.com

Project :	
Model # :	
Item # :	Qty :
Available W/H :	
Approval :	

Direct Cooling Type Cases

Bakery & Deli Cases
High Profile

Model : TCDD-72-2-H

* Red wine and white color come standard

FEATURES / BENEFITS

- **Modern Design**
  By harmonizing curvature and rigidness, our modern style product designs are user-friendly while maintaining the highest product visibility and aesthetics.
- **Environmentally Friendly, Efficient Refrigeration System**
  Turbo Air's refrigerators are designed with oversized and balanced environmentally friendly R-134A (CFC Free) refrigeration. Theses include large evaporators and condensers for faster cooling and balanced temperature throughout the cabinet.
- **Attractive Curved Glass and Elegant Euro Design**
  Curved tempered front glass and minimal frame provide full product visibility to optimize display effects. Its elegant contemporary euro design and luxurious wine colored case will not only enhance any store atmosphere but also will keep product presentation at its best and beautiful.
- **Cantilevered Wired Shelves Adjustable Up and Down, Tilted**
- **304 Stainless Steel Floor and Air Flow Grille**
- **High-Density Polyurethane Insulation**
  The entire cabinet structure is foamed-in-place using high density, CFC free polyurethane insulation.
- **Self-Contained System, No Plumbing Required**
- **Simple Plug-in Installation**
- **Easy Access Control Panel**
- **Sliding Rear Doors for Product Loading and Unloading**
- **Heavy Duty, White PE Coated Wire Shelves**
- **Safety Shielded Top Fluorescent Light Lamp**
- **Easy to Control Temperature and Light Switch**
- **Rear Access of Compressor Compartment for Quick and Easy Service**
- **Refrigerated Deli Case Holds avg. 36°F ~ 42°F for Fresher Deli Products**
- **Recommended Operating Conditions**
  TCDD models are designed to operate in environments where temperature & humidity do not exceed 75°F and 55% relative humidity.

Intertek Intertek 1 YEAR WARRANTY Compressor 5 YEARS WARRANTY (U.S.A only)

Model	CU./FT.	# of Shelves	HP	AMPS	Crated Weight (lbs.)	L x D x H (inches)
TCDD-72-2-H	21.4	2	1/2	11	777	72 1/2 x 30 x 50 1/8

Ver.201203

Direct Cooling Type Cases

Bakery & Deli Cases
High Profile

Model : TCDD-72-2-H

ELECTRICAL DATA	
Voltage	115/60/1
Plug Type	NEMA-5-15P
Full Load Amperes	11
Compressor HP	1/2
Refrigerant	R-134A
DIMENSIONAL DATA	
Net Capacity cu. ft.	21.4
Ext. Length Overall in.	72 1/2 (1842mm)
Ext. Depth Overall in.	30 (762mm)
Ext. Height Overall in.	50 1/8 (1273mm)
Int. Length Overall in.	69 1/4 (1757mm)
Int. Depth Overall in.	24 (610mm)
Int. Height Overall in.	23 5/8 (599mm)
Gross Weight lbs.	777
Net Weight lbs.	639
# of Shelves	2
Self Size	68 1/4 x 15 3/4, 68 1/4 x 17 3/4

Design and specifications subject to change without notice.
Actual shipping weight may differ due to extra packing materials for product protection.

- **WARRANTY : 1 Years Parts and Labor Warranty**
  Additional 4 Years Warranty on Compressor

PLAN VIEW

(unit : inch)

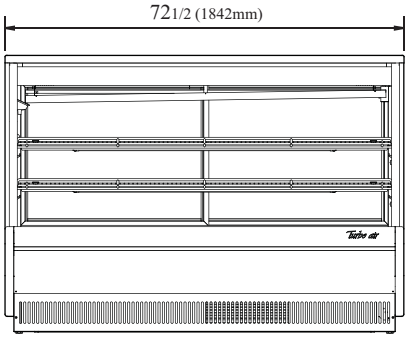

FRONT VIEW

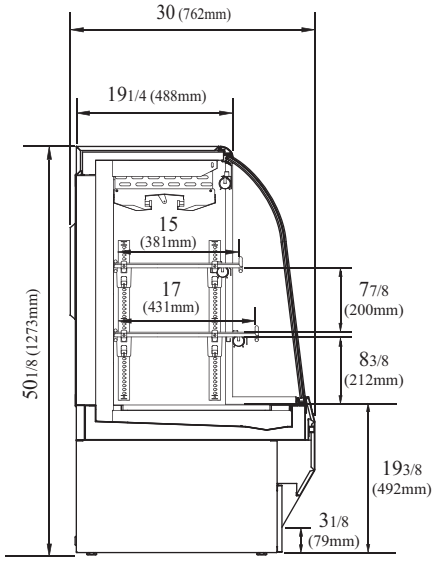

SIDE VIEW

Ver.201203

- **Turbo Air** : 800-627-0032
- **GK** : 800-500-3519
- **Warranty** : 800-381-7770
- **AC** : 888-900-1002