REFRIGERATOR MANUFACTURER
Turbo air
more durable,convenient,beautiful

1250 Victoria St
Carson, CA 90746
Tel. 310-900-1000
Fax. 310-900-1077
www.turboairinc.com

Project :	
Model # :	
Item # :	Qty :
Available W/H :	
Approval :	

Buffet Display Table - Islands

Buffet Display Tables
J Series

Model : JBT-72

FEATURES / BENEFITS

Hot Gas Condensate System
Through Turbo Air's creative innovation, the condensate system surfaces have been specially treated to resist corrosion. This not only increases efficiency without the risk of refrigerant leakage from corrosion, but also prevents the overflow of condensate water.

Side Mount Compressor Unit
Through positioning the compressor to the side, the refrigerator can be serviced without being moved. By innovatively creating a front breathing feature, this model can provide high efficiency in narrow spaces.

Efficient Refrigeration System
Turbo Air's solid door refrigerators are designed with oversized and balanced (CFC Free R-134A) refrigeration systems. These include efficient evaporators and condensers for faster cooling and greater efficiency.

Exterior & Interior of the Cabinet
The Turbo Air J series boasts a stainless steel exterior (galvanized steel back and bottom).Interior is stainless steel floor with AL sides, back and AL door liners. It guarantees the utmost in cleanliness and long product life. It can add a touch of style to the most refined setting.

High-Density Polyurethane Insulation
The entire cabinet structure and solid doors are foamed-in-place using high density, CFC free polyurethane insulation.

Magnetic Door Gaskets
Magnetic door gaskets are of one piece construction, removable without tools for ease of cleaning and replacement.

Sneeze Guard Sold Separately (optional)

Adjustable, Heavy Duty, PE(polyethylene) Coated Wire Shelves

Ergonomically Designed Doors
Customers' fatigue fades away with easy grip handles and doors that open effortlessly. These features along with self-closing doors make this the ultimate choice in customer convenience.

Refrigerator Holds 33°F ~ 39°F for the Best in Food Preservation

Intertek Intertek ISO9001 1 YEAR WARRANTY Compressor 5 YEAR WARRANTY (U.S.A only)

Model	Swing Door	CU./FT.	#of Shelves	#of Pans (1/3)	HP	AMPS	Crated Weight (lbs.)	L x D x H* (inches)
JBT-72	3	18	3	15	1/3	9.9	279	70 7/8 x 27 1/2 x 28 3/4

Ver.201203

* Height does not include 5-7/8" for caster height.

Buffet Display Table - Islands

Model : JBT-72

ELECTRICAL DATA	
Voltage	115/60/1
Plug Type	NEMA-5-15P
Full Load Amperes	9.9
Compressor HP	1/3
Cord Length ft.	9.2
Refrigerant	R-134A
DIMENSIONAL DATA	
Ext. Length Overall in.	70 7/8 (1782mm)
Ext. Depth Overall in.	27 1/2 (698mm)
Ext. Height Overall in.*	28 3/4 (730mm)
# of Doors	3
# of Shelves	3
# of Pans	15
Net Capacity cu. ft.	18
Gross Weight lbs.	279
Net Weight lbs.	234

Design and specifications subject to change without notice.
Actual shipping weight may differ due to extra packing materials for product protection.
* Height does not include 5-7/8" for caster height.

PLAN VIEW

(unit : inch)

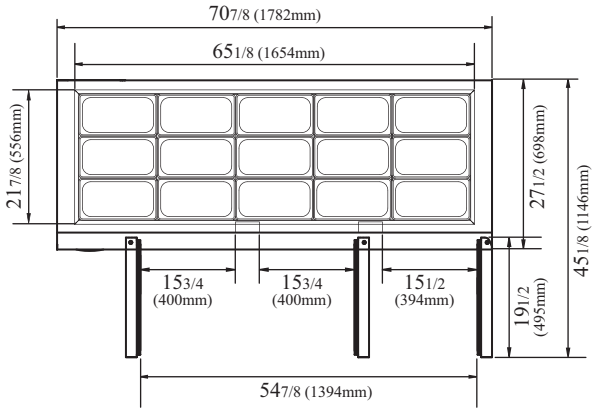

PLAN VIEW

- **WARRANTY :** 1 Year Parts and Labor Warranty
  Additional 4 Year Warranty on Compressor

- SELF-CONTAINED SYSTEM
- 4" DIA. CASTERS ARE STANDARD
- 1/3 SIZE CONDIMENT PANS INCLUDED
- 2.5" DIA. CASTERS AVAILABLE (OPTIONAL)
- LEGS AVAILABLE FOR ALL MODELS (OPTIONAL)
- SNEEZE GUARD AVAILABLE (OPTIONAL)

OPTIONAL ACCESSORIES :

- ❑ 2 1/2" Diameter casters
- ❑ 6" Standard legs
- ❑ Additional PE coated wire shelves
- ❑ 36" Sneeze guard (SNZ-36)

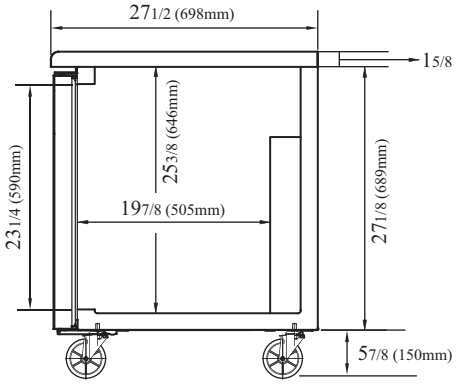

SIDE VIEW

Ver.201203

- **Turbo Air** : 800-627-0032
- **GK** : 800-500-3519
- **Warranty** : 800-381-7770
- **AC** : 888-900-1002