X*treme™-1
Radiant Conveyor Toaster

Models: ☐XTRM-1 120V ☐XTRM-1 208V ☐XTRM-1 240V ☐XTRM-1 230V

PRODUCT: QUANTITY: ITEM

Designed Smart

Developed for high output in tight spaces!

- The X*treme™ -1 generates up to 350 slices of toast per hour.
- Designed to fit into tight space areas on counters.
- Toasters have extended super feeder and warming area to allow for high volume production.
- Unique warming area keeps toast at the perfect temperature until you are ready to serve.

Maximum Versatility!

- A variable speed control for the conveyor produces optimum results in toasting color and texture.
- Able to handle a variety of breads, bagels or muffins.
- Power saver switch allows the operator to save 50% of the energy in between meal occasions.

Safest Toaster in the Industry!

- The only toaster that protects your employees with "Cool Touch" exteriors…both sides and top surfaces.
- "Hand safe" front protection shield that guards against burns as employees and customers reach for toast.

Easy to Maintain and Service!

- Conveyors and crumb trays are easily accessible and simple to clean.
- Removable Side panel allows easy access for service.
- Handles on sides allow unit to be carried easier.

Built Solid

Built to Last

- Stainless Steel construction protects against kitchen wear and tear and rust.
- Metal sheathed heating elements offer enhanced durability and consumer safety vs. quartz tube heating elements.

Reliability backed by APW Wyott's Warranty

- All APW Wyott toasters are backed by a 1-year parts and labor warranty, including on-site service calls within 50 miles of authorized service technicians.
- Certified by the following agencies:

c UL US

UL SANITATION

PROTECTED BY APW/WYOTTS 1 YEAR LIMITED WARRANTY

*X*TREME-1 ™ RADIANT CONVEYOR*

APW Wyott Design Features

- Stainless steel housing with painted aluminum front corners
- Small footprint (15 3/64" x 16 3/4") fits into tight counter space.
- Insulated and air cooled
- Self-dispensing bread drawer slides forward for removal of product
- Chrome coated wire feeder
- Power saver switch reduces energy consumption by 50%
- Side handles
- Removable reflector tray
- Variable speed control
- One inch adjustable legs

See reverse side for product specifications.

***APW Wyott Foodservice Equipment Company** · 729 Third Ave., Dallas, TX 75226*
(800) 527-2100 · (214) 421-7366 · Fax (214) 565-0976 · www.apwwyott.com · info@apwwyott.com

Rev. 9/26/2008

X*treme™-1
Radiant Conveyor Toaster

Models: ☐XTRM-1 120V ☐XTRM-1 208V ☐XTRM-1 240V ☐XTRM-1 230V

PRODUCT: QUANTITY: ITEM #:

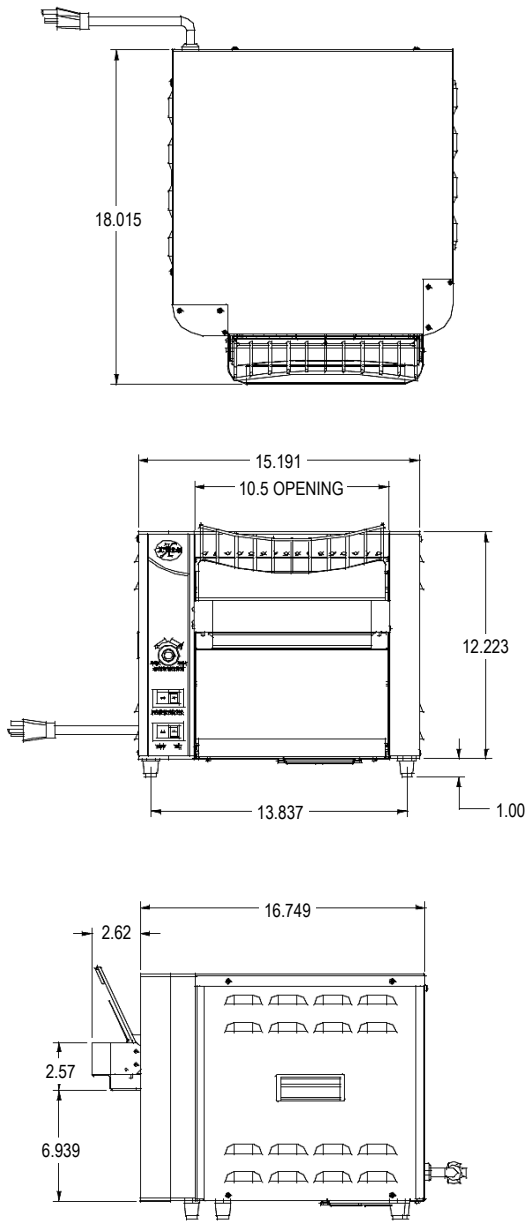

PRODUCT SPECIFICATIONS

Construction:
Stainless steel housing augmented by front painted aluminum corners. Metal sheathed heating elements. MIrror polished stainless steel crumb tray. Polycarbonate handles on sides. Stainless steel front wire guard and "cool to the touch" protective shield. High temperature insulation protects control panel and exteriors.

Electrical Information:
Each unit is equipped with at least a 39", three wire grounded power cord which terminates with a standard three-pronged male plug. The U.S. 120V unit utilizes a NEMA 5-15P plug and the Canadian 120V unit utilizes a 5-20P plug. The 208V, 240V, and 230V all use a NEMA 6-20P.

Electrical Specifications:
X*TREME-1 120V: 120V, 1725W, 14.4 amps
X*TREME-1 208V: 208V, 1725W, 8.2 amps
X*TREME-1 240V: 240V, 1725W, 7.2 amps
X*TREME-1 230V: 230V, 1725W, 7.5 amps

Capacity:
Up to 350 pieces per hour.

Overall Dimensions:
13 1/4"H x 15 3/64"W x 17 3/16"D (16 3/4" w/o plug)
(33.66cm x 38.21cm x 43.66cm)

Shipping:
35 lbs (16 kg)
Freight Class 100
FOB: Dallas, TX

Consultant Specifications

Toasters are constructed of stainless steel and aluminum material. Range of belt speeds should be 45 to 75 seconds. Front corners and front conveyor guard should be painted. Toasters furnished with 1" adjustable legs. Infrared metal sheathed radiant heaters and on/off heat switch for heat control are standard. Power saver switch will be supplied that reduces energy by 50%. Product opening is 1 1/2", motors are permanently lubricated. Units are UL listed, UL Sanitation, and Canadian UL approved.

**APW Wyott reserves the right to modify specifications or discontinue models without incurring obligation.*

APW Wyott Foodservice Equipment Company *· 729 Third Ave., Dallas, TX 75226*
(800) 527-2100 · (214) 421-7366 · Fax (214) 565-0976 · www.apwwyott.com· info@apwwyott.com

Rev. 9/26/2008
#1718