QUALITY CONVEYOR BAGEL TOASTERS BY:

BELLECO™

FOODSERVICE EQUIPMENT SPECIALISTS

✓ *Simple To Use* ✓ *Durable* ✓ *Versatile* ✓ *Energy Efficient*
✓ *Safety* ✓ *Productive* ✓ *Customer Focused*

MODEL JT2-B SHOWN

Why BELLECO, Inc.?

- Basic, simple operation
- Durable, Rugged Construction
- Forced Convection Toasting
- 10½" Conveyor Belt
- Inexpensive To Operate
- Energy Efficient CAL-ROD Heaters
- 50% Power Saving Feature
- 24 Hrs/Day, 7 Days/Week Service

JT2-B - 2¼" Product Clearance

~ 10½" Wide Conveyor
~ Special Cool-Down Feature
~ 208, 220 and 240 Volts
~ Up to 1,200 Bagels or Bun Halves/hr

Perfect For Toasting or Warming...

- ***Bagels***
- ***English Muffins***

Refer to Installation on Reverse

QUALITY CONVEYOR BAGEL TOASTERS

BELLECO™

FOODSERVICE EQUIPMENT SPECIALISTS

Model JT2-B

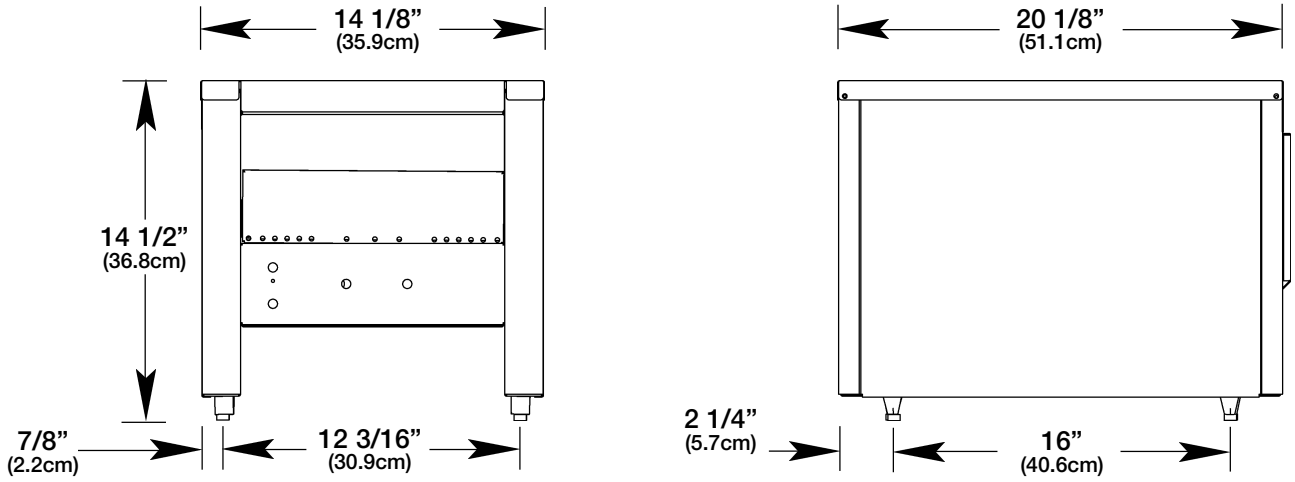

Scale 1” (2.5cm) = 8” (20.0cm) Approx.

CONTROLS: Variable Conveyor Speed Control; Power Saver Switch; and High Temperature Limit Switch.

CONSTRUCTION: Chassis 18ga. Stainless Steel, Toaster Interior 20ga. Stainless Steel and 18ga. Aluminized Steel. Units are easy to disassemble for cleaning and service.

ELECTRICAL DATA:

Model	Volts	Hz/ Phase	kW	Amps	Power Supply
JT2-B	208	60/1	3.2	15.4	6-20P
JT2-B	220	60/1	3.2	14.6	6-20P
JT2-B	240	60/1	3.2	13.4	6-20P

CLASSIFIED TO NSF-4

For International voltages and frequencies please contact Belleco, Inc.

SHIPPING DATA:

JT2-B: 55lbs 24 1/4W x 18 1/2D x 18 1/2H

WARRANTY: Two year parts warranty and one year; factory-authorized labor.

It is our policy to build equipment that is ETL Listed in the USA and Canada and ETL Sanitation Classified to NSF 4. However, our continued process of product improvements makes it necessary to submit new models to the agencies as they are developed and consequently not all models bear the appropriate agency labels at all times.

INSTALLATION: Counter model; furnished with 1” adjustable legs and 4 foot cord. Units should be located so that the air around the fan motor intake under the toaster, does not contain grease or steam and does not exceed 100°F.

FORCED CONVECTION: Fractional h.p. motor with fan, located in the control box area. Dual-purpose fan forces air around controls and motors. Air is forced between inside and outside chassis sides and cools the exterior panels. Heated air is then forced across the CAL-ROD heaters and conveyor surface which results in increased efficiency and safe operation.

BELLECO™

FOODSERVICE EQUIPMENT SPECIALISTS
P.O. Box 880 Saco, ME / USA 04072
877-854-8006 • FAX (207) 854-8009

FOR TECHNICAL ASSISTANCE IN THE U.S.A. AND CANADA, CALL TOLL FREE:
1-877-854-8006, 24 HRS/DAY
E-mail: info@bellecocooking.com
OR VISIT OUR WEB SITE:
http://www.bellecocooking.com

CONTINUED PRODUCT IMPROVEMENT MAY NECESSITATE SPECIFICATION CHANGES WITHOUT NOTICE.

PRINTED IN THE USA BY SACO PRINTING CO., INC. - 8/05

Tundra Specialties