Model 1800

Pressure Fryer

- **Proven round cooking well design** – engineered for more uniform heat distribution, durability, and efficiency; no cold spots or corners.
- **Unique Auto Comp™ feature** – automatically adjusts cooking time to accommodate for varying sizes and temperatures of loads.
- **Exclusive quick closing and opening single action sealing cover** – designed for safety and ease of use.
- **Built-in filter system** – provides quick, easy, and safe cooking oil filtration; no heated fittings to disconnect.
- **Automatic cook cycle counter** – monitors production between filtering.
- **Easy to operate** – one-of-a-kind Temp-N-Time™ feature offers the capability to pre-program up to 10 different cook cycles for quick and easy preparation of various menu items.
- **Compact** – occupies only 4.38 square feet of floor space.
- **Durable** – backed by a 5-year cooking well warranty and a 2-year solid state controller warranty.
- **Fast and productive** – cooks up to 40 pieces of fresh chicken per load in under 10 minutes!
- **Fits anywhere** – available in both gas and electric models.

CE approved machines available.

The only brand of equipment authorized for producing Genuine Broaster Chicken®!

©2008 The Broaster Company
THE BROASTER COMPANY, 2855 CRANSTON ROAD, BELOIT, WI 53511-3991 USA • PHONE: 608-365-0193 • FAX: 608-363-7957 • E-MAIL: BROASTER@BROASTER.COM
Broaster®, Broasted®, Broaster Chicken®, Broaster Foods®, and Broasterie® are registered trademarks. Usage is available only to licensed operators with written authorization from The Broaster Company.

Model 1800

Pressure Fryer

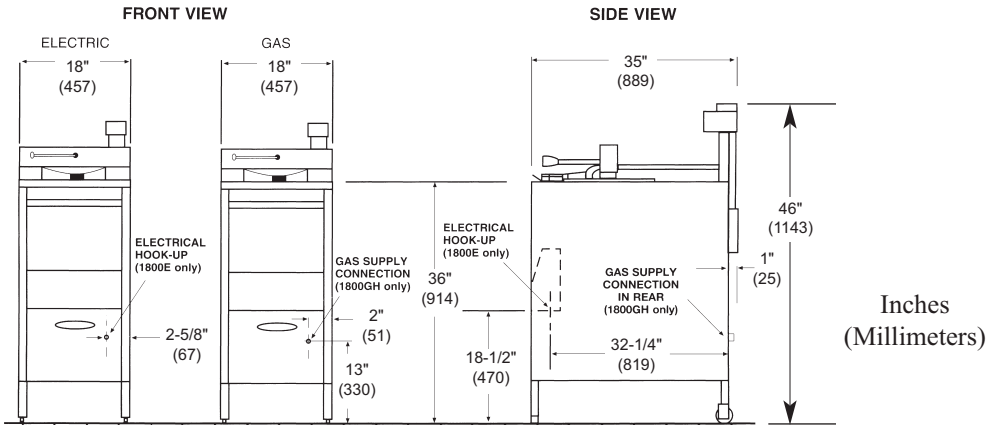

SPECIFICATIONS

MODEL	FRESH CHICKEN CAPACITY	COOKING OIL CAPACITY	OPERATING PRESSURE	OVERALL DIMENSIONS W	D	H	COUNTER HEIGHT	SHIPPING WEIGHT	CUBES
1800E and 1800GH	14 lbs./load 80 lbs./hour	42 lbs.	12 - 14 P.S.I.	18" (457)	35" (1016)	46" (1200)	36" (914)	E: 270 lbs. GH: 310 lbs.	20.6

ENERGY REQUIREMENTS

1800E	Single Phase	208V - 48 Amps 240V - 45 Amps
	Three Phase	208V - 28 Amps 240V - 26 Amps
1800GH	65,000 BTU	120V - 15 Amps (6′ cord & plug included)

Main Burner Orifice

Natural Gas: #24 Drill, LP Gas: #41 Drill

Note: Specifications indicated above are for elevations up to 2,000 feet. For higher elevations, consult your authorized Broaster distributor for proper orifice size.

Pilot Burner Orifice

Natural Gas: .018", LP Gas: .011"
Gas connection 1/2" NPT (adapter for 3/4" NPT included)

ADDITIONAL FEATURES

- Durable, welded tubular steel frame – powder coated to resist corrosion.
- Specially designed stainless steel basket with a three-position ratchet-style removable basket handle – for easier loading and unloading of product.
- Advanced solid state controls – for easy operation and dependability.
- Stainless steel top and side panels – for durability and easy cleaning.
- Rear casters (1800E unit only).

ACCESSORIES AVAILABLE

Basic Accessory Kit • Complete Start-up Accessory Kit • Caster Kit

FORM 92163R 9/2008 Printed in U.S.A.
1-800-365-8278 www.broaster.com
©2008 The Broaster Company
THE BROASTER COMPANY, 2855 CRANSTON ROAD, BELOIT, WI 53511-3991 USA • PHONE: 608-365-0193 • FAX: 608-363-7957 • E-MAIL: BROASTER@BROASTER.COM
Broaster®, Broasted®, Broaster Chicken®, Broaster Foods®, and Broasterie® are registered trademarks. Usage is available only to licensed operators with written authorization from The Broaster Company.