EVOLUTION IN HIGH SPEED COOKING

AXP20

HIGH SPEED COMMERCIAL COMBINATION OVEN

The Amana® AXP20

The new AXP20 utilizes an innovative combination of convection,radiant and microwave technology to cook foods up to 15 times faster than traditional cooking methods.

Key Features

- Combination of radiant, convection and microwave to quickly toast and heat a variety of products.
- Up to 360 programmable menu items simplifies cooking and ensures consistent results.
- Automatic voltage sensor automatically adjusts for 208 or 230 V installation.
- Catalytic convertor filters grease and odors from air.
- EZCard Menu Management System simplifies menu programming updates.
- User-friendly controls are easy to use and require minimal user training.
- Durable stainless steel exterior and interior for years of commercial foodservice use.
- Global service network provides on-going product support.
- UL-KNLZ certified for ventless installation
- Limited 3-year warranty.

A Powerful & Cost-Effective Way to . . .

- Serve quality food, quickly
- Increase food sales and profits
- Cook fresher, hotter foods on demand

Maximize Your Profits

The powerful Amana AXP20 is built to handle the fast pace and grueling demands of the busiest kitchens. It's a high-performing, heavy-duty unit that's ideal for a broad array of foodservice applications.

For more information about any of our fine commercial microwave ovens, contact your Amana distributor, call us direct at 800.233.2366 or visit our web site: www.amanacommercial.com.

PART OF AGA FOODSERVICE GROUP
Form # ACRR0720 rev. 10/07
©2007 AGA Commercial Products, Inc.
Printed in the USA.

Amana®
HIGH PERFORMANCE HAS A NAME™
www.amanacommercial.com

AXP20

HIGH SPEED COMMERCIAL COMBINATION OVEN

SPECIFICATIONS

Configuration	Countertop
Control System	Touch and dial
Programmable Control Pads	10
Total Programmable Settings	360
Power Levels	11
Maximum Cooking Time	60 minutes
Program Menu	Multi-level menu capability
Defrost	Yes, 20% Power
Time Entry Option	Yes
Microwave Distribution System	Rotating Antenna
Magnetron(s)	2
Display	LCD, Touch Screen, Backlit
Stage Cooking	4 stages
Interior Light	No
Door Opening System	Pull Down, Ergonomic Designed Handle
Automatic Voltage Sensor	Yes
EZCard Menu Management	Yes
Temperature Range	200 - 520° F
Temperature Increments	5° F
Air Filter	Yes, Removable
Fan Speed	0-100%
Fan Speed Increments	10%
Microwave Power	0-100%
Microwave Power Increments	10%
Radiant Level	0-100%
Radiant Level Increments	10%
Rack	Removable, one rack position
Warranty	Limited 3-Year Includes - 1 Year Full Parts, Labor, and Travel

Cabinet	Exterior Dimensions	Interior Dimensions
Height	20-1/4"	10" (7-3/4" from rack)
Width	25"	16"
Depth (overall without handle)	25-5/8"	15"
Depth (door open 90°)	37-5/8"	
Usable Cavity Space	1.07 cubic ft.	
Outercase Material	Stainless Steel	
Cavity Interior Finish	Stainless Steel	
Electrical Characteristics		
Power Consumption	5700 W	
Power Output (Microwave)	2200 W*	
Power Source	208 V - 240 V, 60 Hz, 30 A single phase	
Plug Configuration	NEMA 6-30	
Frequency	2450 MHz	
Power Cord Length	5' (1.5 m)	
Weight/Shipping Information		
Net Weight	150 lbs. (52 kg)	
Approximate Shipping	175 lbs. (56 kg)	
Shipping Box Size	34.75"W x 28.25"H x 32.5"D	

Amana's continuing commitment to quality products may mean a change in specification without notice. *Microwave output ratings based on IEC 705 test.

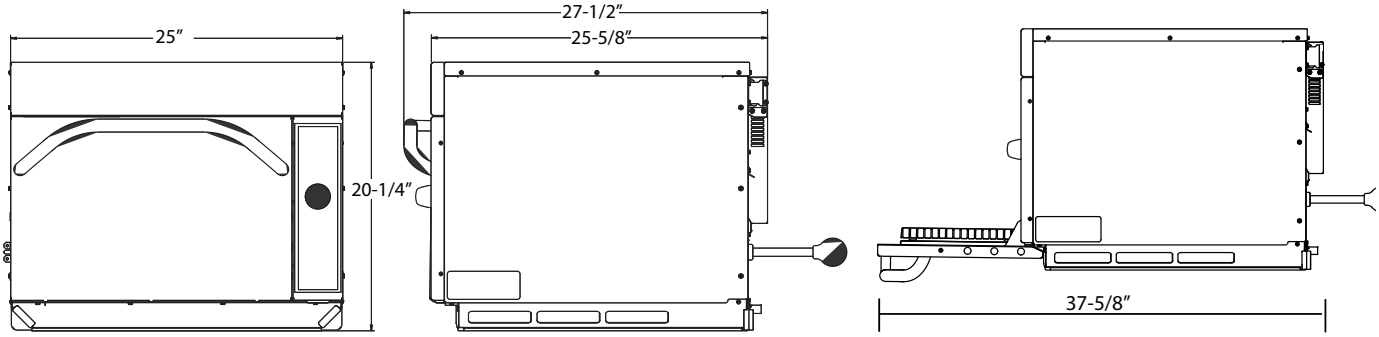

For more information about any of our fine commercial microwave ovens, contact your Amana distributor, call us direct at 800.233.2366 or visit our web site: www.amanacommercial.com.

PART OF AGA FOODSERVICE GROUP
Form # ACRR0720 rev 10/07
©2007 AGA Commercial Products, Inc.
Printed in the USA.

HIGH PERFORMANCE HAS A NAME™
www.amanacommercial.com