Scotsman

# B222S, B322S, B330P, B530P/S, B842S, B948S – Storage Bins

B222S, B322S, B330P, B530P/S, B842S, B948S - Storage Bins

## Modular Storage Bins

B530S shown with optional KLP8S legs

### Features

New sleek, contemporary styling. A perfect match to Prodigy cube ice machines and other Scotsman ice machines.

Convenient, built-in scoop holder.

Easily removable baffle, no tools required for cleaning.

Unique recessed drain fitting for maximum installation flexibility.

Spring loaded door with hidden hinges for easy opening and closing.

Available in stainless steel or durable rotocast plastic.

ARI, NSF approved.

### Storage Capacity

| B222S | | B322S | | B330P | |
|---|---|---|---|---|---|
| APPLICATION | ARI | APPLICATION | ARI | APPLICATION | ARI |
| 242/110 | 190/86 | 370/168 | 290/132 | 344/156 | 270/123 |

| B530P/S | | B842S | | B948S | |
|---|---|---|---|---|---|
| APPLICATION | ARI | APPLICATION | ARI | APPLICATION | ARI |
| 536/244 | 420/191 | 778/353 | 610/277 | 893/406 | 700/319 |

ARI PERFORMANCE CERTIFIED™ ARI Standard 820 Ice Storage Bin www.aridirectory.org

NSF

### Polyurethane Insulation

Foam insulation is forced between the wall and liner under heat and pressure to form a perfect wall to wall bond, preserving ice supply for long periods.

### Bin Interior

The polyethylene bin interior is sanitary and easy to clean. Resists scratches and scuffs from ice scoops.

### Warranty

- 3 years parts and labor on all components.

Warranty valid in North, South & Central America. Contact factory for warranty in other regions.

**Scotsman Ice Systems**
**775 Corporate Woods Parkway**
**Vernon Hills, IL 60061**

**1-800-SCOTSMAN**
**Fax: 847-913-9844**
**E-mail: customer.service@scotsman-ice.com**

**www.scotsman-ice.com**

# Scotsman®

The Smart Choice in Ice.™

B222S, B322S, B330P, B530P/S, B842S, B948S - Storage Bins

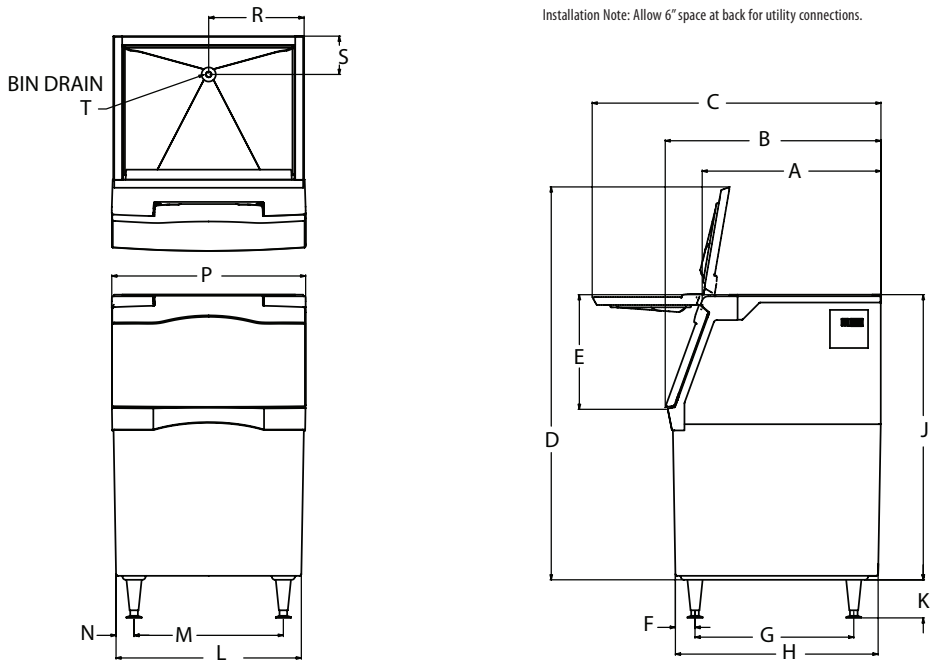


Installation Note: Allow 6" space at back for utility connections.

## Dimensions

| Model # | A | B | C | D | E | F | G | H | J | K | L | M | N | P | R | S | T |
|---|---|---|---|---|---|---|---|---|---|---|---|---|---|---|---|---|---|
| B222S | 28.23 | 34 | 45.5 | 47.24 | 18 | 3.88 | 25 | 32.75 | 31 | 6 | 22 | 15.5 | 3.25 | 22.5 | 11 | 6 | .75 NPT |
| B322S | 28.23 | 34 | 45.5 | 61.24 | 18 | 3.88 | 25 | 32.75 | 44 | 6 | 22 | 15.5 | 3.25 | 22.5 | 11 | 6 | .75 NPT |
| B330P | 28.15 | 34 | 45.5 | 47.24 | 18 | 3.33 | 25 | 32.42 | 31 | 6 | 30 | 23.5 | 3.08 | 30.5 | 15 | 6 | .75 NPT |
| B530P/S | 28.15 | 34 | 45.5 | 61.24 | 18 | 3.09 | 25 | 31.93 | 45 | 6 | 30 | 23.5 | 2.83 | 30.5 | 15 | 6 | .75 NPT |
| B842S | 28.07 | 34 | 45.5 | 61.87 | 18 | 3.88 | 25 | 32.75 | 44 | 6 | 42 | 35.5 | 3.25 | 42.5 | 21 | 6 | .75 NPT |
| B948S | 28.05 | 34 | 45.5 | 61.24 | 18 | 3.88 | 25 | 32.75 | 44 | 6 | 48 | 41.5 | 3.25 | 48.5 | 24 | 6 | .75 NPT |

Finish: S = Stainless Steel, P = Poly

## Shipping

| Model # | Carton | Weight |
|---|---|---|
| **B222S** | 24" x 36" x 35" | 120 |
| **B322S** | 24" x 36" x 47" | 140 |
| **B330P** | 32" x 36" x 33" | 90 |
| **B530P/S** | 32" x 36" x 47" | 110 / 150 |
| **B842S** | 44" x 36" x 47" | 185 |
| **B948S** | 50" x 36" x 47" | 220 |

## Accessories

| Model # | Description |
|---|---|
| KBC1 | Kit, Bin Casters for B530S, B842S, B948S & SB380.* Not for use with B222S, B322S or SB480 when using extensions. |
| KBC1P | Kit, Bin Casters for B330P & B530P.* |
| KLP7 | Kit, Legs, 6", Flanged Feet, For B Bins, HD Dispensers, AFE, CU1/2/3 & NSE. |
| KLP8S | Kit, legs, 6", Stainless Steel, For B Bins, HD Dispensers, AFE, CU1/2/3 & NSE. |
| BGS10 | Bagger, Hooks on Any Bin. |
| KBAG | Kit, Bags, 1000, For BGS10. |
| KSEALER | Kit, Tape Sealer, For BGS10. |
| KTAPE | Kit, Tape, 180 ft. Roll, For BGS10. |
| KHOLDER | Kit, Scoop Holder, Stainless Steel. |

* 3.5" Diameter, 2 Locking, Raises Bin 4.5".

## Operating Requirements

| | Minimum | Maximum |
|---|---|---|
| **Air Temperatures** | 50°F (10°C) | 100°F (38°C) |
| **Water Temperatures** | 40°F (4.4°C) | 100°F (38°C) |
| **Remote Cond. Temps** | -20°F (-29°C) | 120°F (49°C) |
| **Water Pressures** | 20 PSIG (1.4 bar) | 80 PSIG (5.5 bar) |
| **Electrical Voltage** | -10% | +10% |

Specifications and design are subject to change without notice.


**Scotsman Ice Systems**
**775 Corporate Woods Parkway**
**Vernon Hills, IL 60061**

**1-800-SCOTSMAN**
**Fax: 847-913-9844**
**E-mail: customer.service@scotsman-ice.com**

**www.scotsman-ice.com**


© 2008 Scotsman Ice Systems.