Project Name:	
Location:	
Item:	Qty.:
Model:	

COMMERCIAL MIXERS

GEM130

30 Quart Mixer

GEM130

30 Quart Mixer

FEATURE LIST	
Model:	GEM130
Description:	30 Quart Mixer
Voltage:	120/60/1, 220/50/1, 220/60/1
Rated Power:	2 hp
Bowl Capacity:	30 qt
Speed:	91/166/282 R/MIN
Weight:	450 lb

These all-purpose mixers use a planetary mixing action that consistently blends, mixes and aerates all ingredients with satisfactory results. The heat treated carbon steel gears deliver energy at three pre-selected fixed speeds. Each mixer comes standard with a stainless steel bowl, flat beater, spiral dough hook, and wire whip. The stainless steel wire front bowl guard opens easily for adding ingredients. The bowl guard magnetic lock prevents the mixer from running if guard is opened or the bowl is lowered. The switches are moisture resistant. All units come with an overload swicth which protects the motor.

INTERTEK ETL SANITATION LISTED C INTERTEK ETL LISTED US C UL US	Specifications subject to change without notice.
	Approvals:

ASBURY FOODSERVICE

ASBURY FOODSERVICE
3355 Enterprise Ave • Suite 160 • Ft. Lauderdale, FL 33331
Tel: 954.202.7419 • Fax: 954.202.7337 • www.asburyfoodservice.com
Asbury Foodservice's continuing comitment to quality products may mean a change in specification or pricing whitout notice.

PLAN VIEW

GEM130

30 Quart Mixer

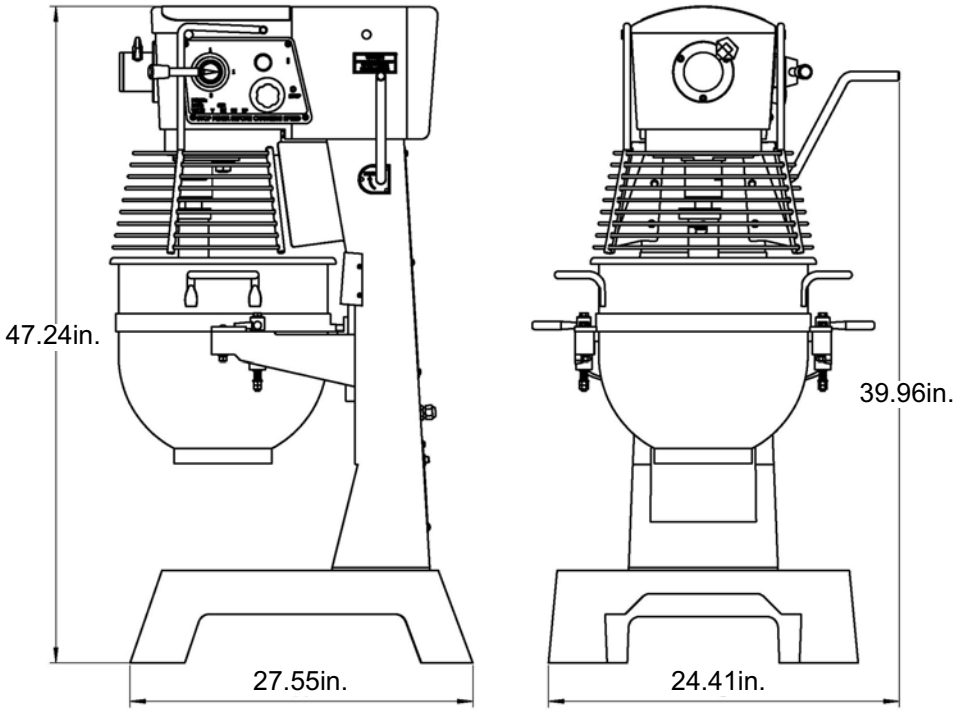

Dimensional Data

Model	Description	Voltage	Rated Power	Bowl Capacity	Speed	Weight
GEM130	30 Quart Mixer	120/60/1 220/50/1 220/60/1	2 hp	30 qt	91/166/282 R/MIN	450 lb

- Mixer has a 3 speed, 2 hp, totally enclosed and permanetly lubricated, thermally protected motor. Electrical specs 120/60/1, 220/50/1, 220/60/1,18amp. Speed 91/166/282R/min
- Heat treated carbon steel gears fully sealed allow durability and dependability with quiet operation.
- 3 Pre-selected, fixed speeds.
- Manual bowl lift is lever operated and self locking in top position.
- #12 Taper hub front port.
- Spiral Dough Hook, Flat batter beater, and wire whip.
- Bowl guard with magnetic lock prevents the unit from running if guard is open.
- Overload Switch on all mixers.
- Switches are moisture resistant.

ASBURY FOODSERVICE

ASBURY FOODSERVICE
3355 Enterprise Ave • Suite 160 • Ft. Lauderdale, FL 33331
Tel: 954.202.7419 • Fax: 954.202.7337 • www.asburyfoodservice.com
Asbury Foodservice's continuing comitment to quality products may mean a change in specification or pricing whitout notice.