Item No. _____

Quantity _____

AIA File No. _____

NEMCO™
FOOD EQUIPMENT

Model No.
77316-7 77316-10
77316-13 77316-19

Spade Well
Ice Cream Spade Cleaning Well

Standard Features:

- Ice Cream Spade Cleaning Well
- Well is constructed of 300 series Stainless Steel
- 3/8" diameter spigot for running water
- Spigot can be installed for left or right side operation
- Available one piece Dividers create compartments for holding spades upright and is easily removable for cleaning (except 77316-7)
- Overflow Drain Tube is easily removable
- Rubber bumper on rim provides protection and sound deadening when removing water from spades
- Design incorporates user friendly rounded corners
- Available Installation Kit includes plumbing components required for "universal" installation of water supply and drain for easy installation by a plumber.

**** Do Not Install in Food Zone or Sink Compartment.**

NSF®

NEMCO Food Equipment, Ltd.
301 Meuse Argonne
P.O. Box 305
Hicksville, OH 43526
Phone (419) 542-7751
FAX (419) 542-6690
www.nemcofoodequip.com

Printed 3/07 Printed in U.S.A.

Model No.
77316-7 77316-10
77316-13 77316-19

AIA File No.

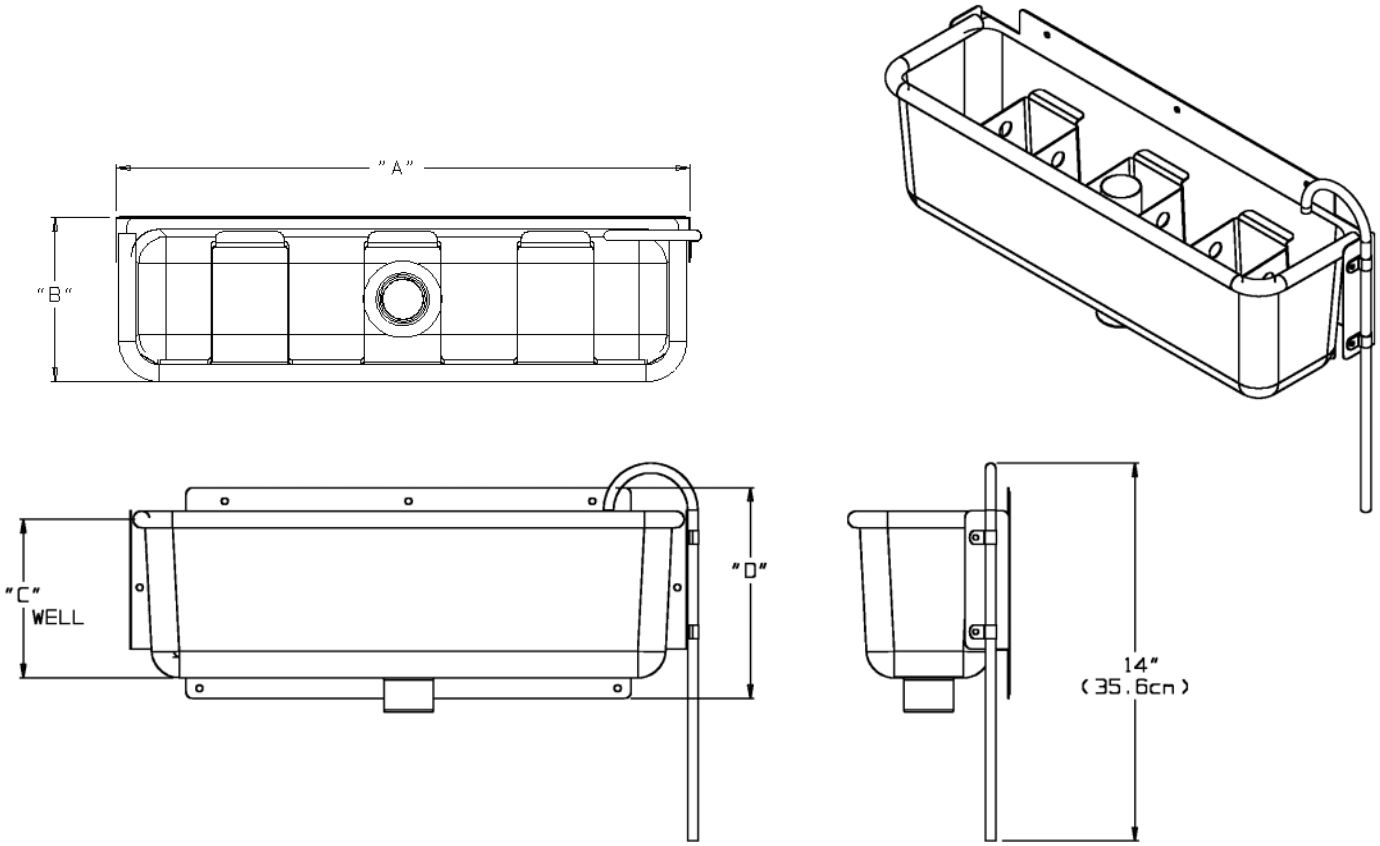

Specifications:

Model No.	"A" Inches	"B" Inches	"C" Inches	"D" Inches	Shipping Weight lbs./(Kg)
77316-7	7	6 1/4	4	5 7/8	5 (2.3)
77316-10	10 3/8	6 1/2	4	5 7/8	6 (2.7)
77316-13	12 3/4	6 3/4	4	5 7/8	7 (3.2)
77316-19	20 5/8	6 1/8	6	7 7/8	11.5 (5.2)

Note: Dimensions are approximate.

Typical Specifications

Spade Well Ice Cream Spade Cleaning Well has a stainless steel body and is equipped with a rubber bumper. Spade Well models are listed with the National Sanitation Foundation (NSF).

** Food Zone: Equipment surfaces intended to be in direct contact with food and equipment surfaces that food or condensate may contact and then drain, drip, or splash back into food or onto surfaces that are intended to be in direct contact with food. **For example: directly installed within the ice cream cabinet is a food zone (REF: NSF STD NSF/ANSI 170 - Glossary of food equipment Terminology, Section 3.223.2)**

NEMCO FOOD EQUIPMENT
NEMCO Food Equipment, Ltd.
301 Meuse Argonne, P.O. Box 305
Hicksville, OH 43526
Phone (419) 542-7751
FAX (419) 542-6690
www.nemcofoodequip.com

3/07 Printed in U.S.A.