T&S BRASS AND BRONZE WORKS, INC.

2 Saddleback Cove / P.O. Box 1088
Travelers Rest, SC 29690

Travelers Rest, SC: 800-476-4103 Simi Valley, CA: 800-423-0150 Fax: 864-834-3518 www.tsbrass.com

REG. #A2601
ISO #9001

Model No.
EC-3103-HG

Item No.

This Space for Architect/Engineer Approval

Job Name_____Date_____

Model Specified_____ Quantity_____

Customer/Wholesaler_____

Contractor_____

Architect/Engineer_____

ADA Compliant

T&S ChekPoint™

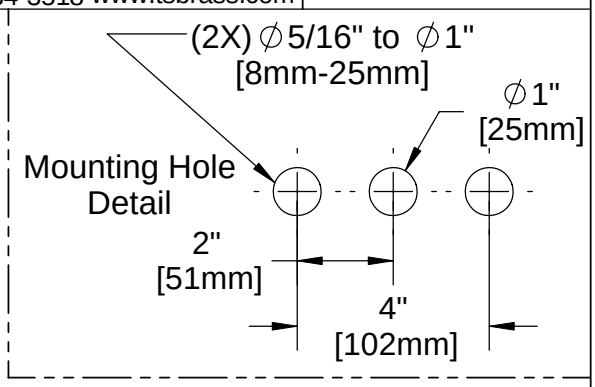

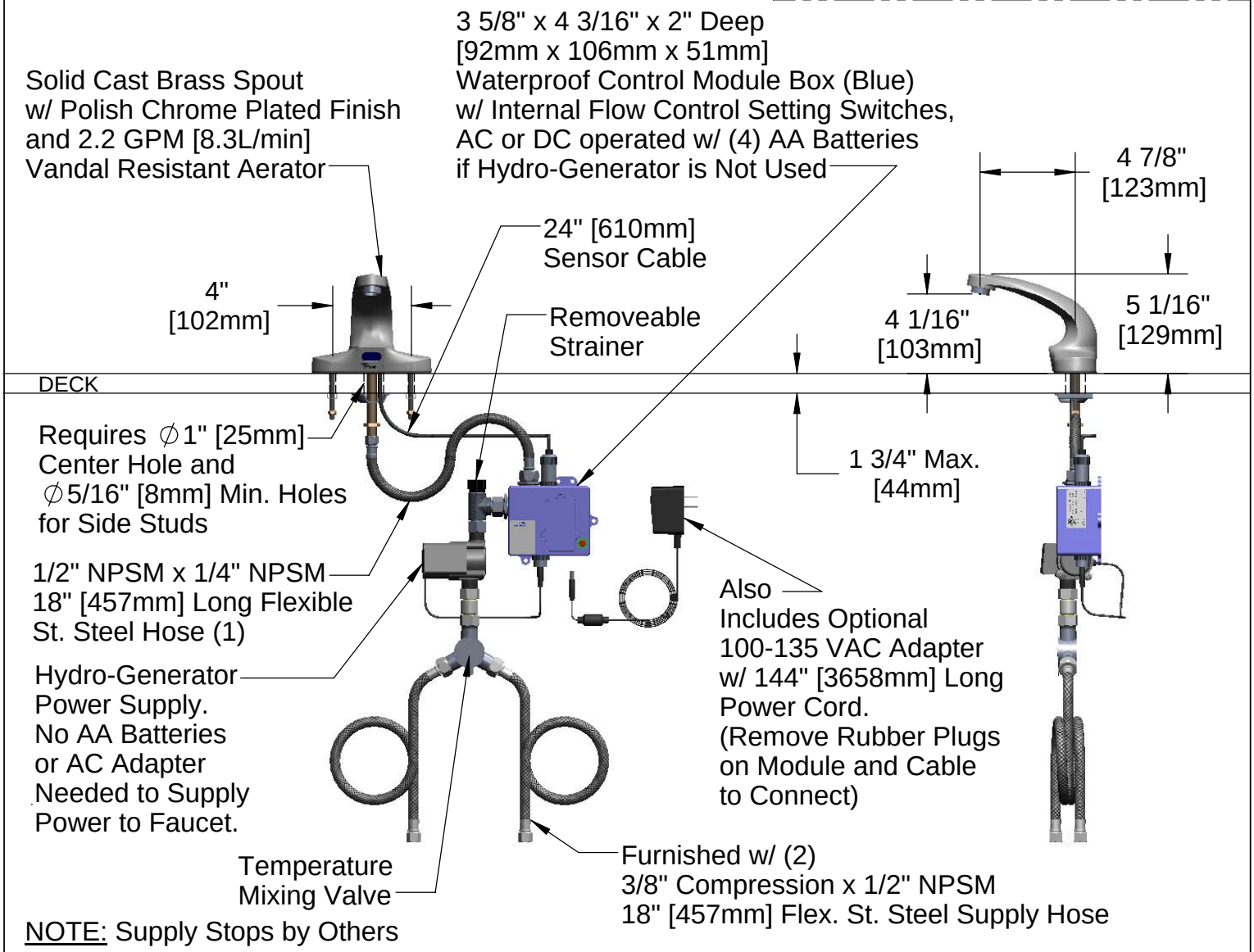

NOTE: Supply Stops by Others

Product Specifications: Chrome Plated Brass Electronic Faucet:
4" Centerset Deck Mount Spout w/ VR Aerator, AC/DC Control Module with Internal Flow Control Setting Switches, Temperature Control Mixing Valve,Hydro-Generator, 18" Long Hot & Cold Supply Stop Flexible Connector Hoses

Drawn	Checked	Approved
GEF	DMH	JHB
Scale: 1:8		Date: 3/13/09

T&S BRASS AND BRONZE WORKS, INC.

2 Saddleback Cove / P.O. Box 1088
Travelers Rest, SC 29690

Travelers Rest, SC: 800-476-4103 Simi Valley, CA: 800-423-0150 Fax: 864-834-3518 www.tsbrass.com

REG. #A2601
ISO #9001

Model No.
EC-3103-HG

Item No.

ITEM NO.	SALES NO.	DESCRIPTION
1	016355-45	Aerator w/ Key, Vandal Resistant, 2.2 GPM, 13/16-27 Male
2	017195-45	Angled Sensor w/ Cable
3	016297-45	Inlet Hose, Faucet, 1/2" NPSM-F x 1/4" NPSM-F
4	016647-45	ChekPoint Module (Blue)
5	5EF-0002	A/C Transformer
6	5EF-0006	Manual Mixing Valve
7	5EF-0005	Supply Hose, 9/16-24 Female x 1/2" NPSM
8	Q015425-45	Vandal Resistant Key
9	EC-HYDROGEN	Hydro-generator and Swivel Coupling
10	017506-45	1/2 NPSM Swivel Coupling

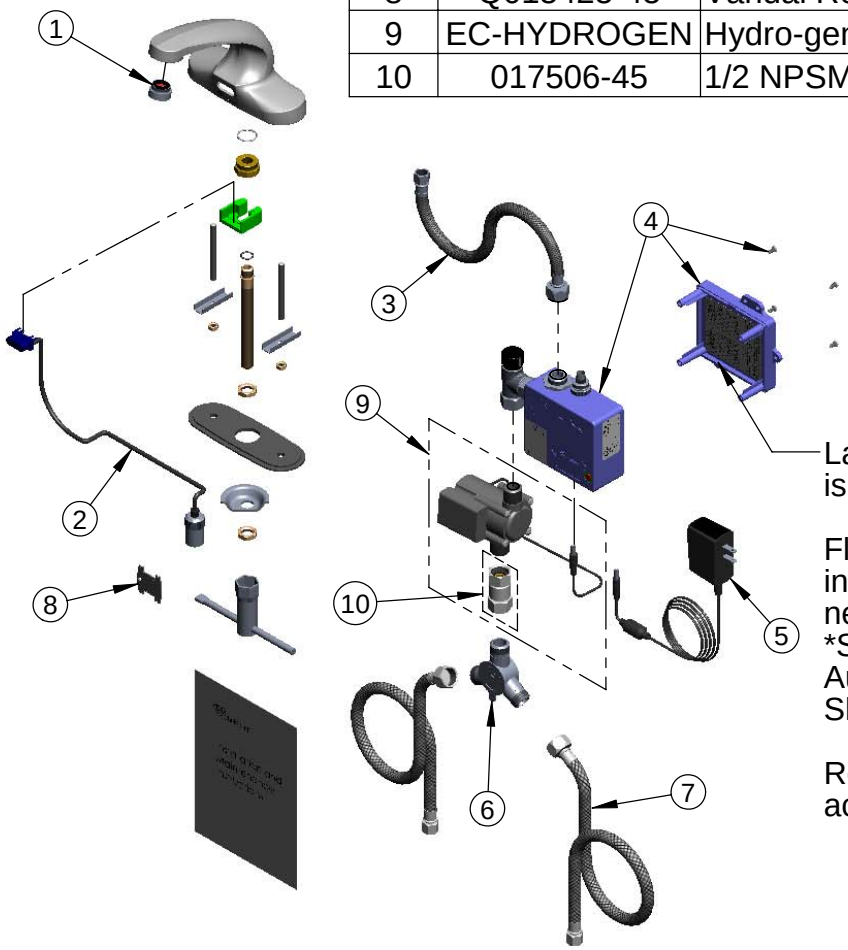

Label for Flow Control Switch Settings is located on Inside of Back Cover.

Flow Control Switches are located inside Module Housing in Black Box next to Battery Compartment.
*Switches are set to DEFAULT position:
Auto Time Out = 10 seconds
Shut Off Delay = 1 second

Remove (4) screws and back cover to access switches.

*Available Water Flow Control Selections:
(6) Auto Time Out Selections - 10 sec, 25 sec, 45 sec, 60 sec, 3 min, 20 min
(6) Shut Off Delay Selections - 1 sec, 2 sec, 3 sec, 4 sec, 5 sec, 6 sec

Product Specifications: Chrome Plated Brass Electronic Faucet:
4" Centerset Deck Mount Spout w/ VR Aerator, AC/DC Control Module with Internal Flow Control Setting Switches, Temperature Control Mixing Valve,Hydro-Generator, 18" Long Hot & Cold Supply Stop Flexible Connector Hoses

Drawn	Checked	Approved
GEF	DMH	JHB
Scale: 1:8		Date: 3/13/09